EXISTING CONDITIONS STUDY

for

NEWTON FALLS COMMUNITY CENTER

52 East Quarry Street
Newton Falls, Ohio 44444

prepared for:

THE CITY OF NEWTON FALLS

prepared by:

the workshop arch + design, llc
ohio one building
25 east boardman street, suite 537
youngstown, ohio 44503

04.11.2016

PROJECT TEAM	
OVERVIEW	Study Description Limitations
ZONING	Zoning Classification and Zoning Map
BUILDING CODE	2011 Ohio Building Code (OBC)
LIFE SAFETY CODE	2012 Life Safety Code; NFPA 101
ACCESSIBILITY GUIDELINES	2010 ADA Standards for Accessible Design
SITE	Location and Site Access Site and Facility Description
EXISTING BUILDING CONDITIONS	Building History Foundation Roof, Floor, and Wall Structure Exterior Walls, Doors, Windows, and Roof Ramp, other Entrances, and Abandoned Access Basement Interior Environment and Function of the Spaces Auditorium and Stage Activity Rooms, Toilet Rooms, and Kitchen Mechanical Systems Plumbing and Fire Protection Systems Electrical Service and Distribution System Fire Alarm System Lighting and Security Systems
RECOMMENDATIONS	Additional Recommended Investigations and Testing Site Recommendations Structure Recommendations Building Envelope Recommendations Interior Environment Recommendations Mechanical Systems Recommendations Plumbing Systems Recommendations Fire Protection Systems Recommendations Electrical Systems Recommendations
PROBABLE COSTS	Site, Structure, Exterior Envelope, Interior Environment, Mechanical, Plumbing, Fire Protection, Electrical
APPENDIX	Appendix A: Zoning Regulations Appendix B: OBC support documentation Appendix C: LSC support documentation Appendix D: ADA support documentation Appendix E: Asbestos and Lead Testing Appendix F: Project Team

OWNER:	The City of Newton Falls 19 North Canal Street Newton Falls, Ohio 44444
ARCHITECT:	the workshop arch + design, llc ohio one building 25 east boardman street; suite 537 youngstown, ohio 44503 330.743.2200 denise a. holt; aia, acha, ncarb, edac, leed ap
STRUCTURAL ENGINEER:	Baker Bednar Snyder & Associates Inc. 628 Niles-Cortland Road; Suite 201 Warren, Ohio 44484 330.856.7222 Josh D. Thomas, PE
MECHANICAL ENGINEER:	J.M. Verostko, Inc. 1216 Ameritech Boulevard Youngstown, Ohio 44509 330.799.1339 Peter Verostko, PE, LEED AP BD+C
ELECTRICAL ENGINEER:	CJL Engineering 1044 North Meridian Road; Suite B Youngstown, Ohio 44509 330.746.7000 Eric Bella, PE
GENERAL CONTRACTOR:	DeSalvo Construction Company, Inc. 1491 West Liberty Street Hubbard, Ohio 44425 330.759.8145 Joseph K. DeSalvo, CHC
ENVIRONMENTAL TESTING:	Diamond Environmental 3624 State Route 303 Ravenna, Ohio 44266 330.422.0799 Keith R. Bickel, CHMM, REP, CAHES

This study was performed for the City of Newton Falls in regards to the existing conditions of the Newton Falls Community Center located at 52 East Quarry Street; Newton Falls, Ohio 44444.

STUDY DESCRIPTION:

This study includes general information for the site, zoning and building code requirements, life safety requirements, ADA requirements, existing exterior and interior conditions of the facility, and recommendations to rectify items of concern identified at the time of our site visit. This study does not take into account the renovation of the existing facility.

LIMITATIONS:

This report is based on visual observations and limited conversations. We did not employ any testing or investigative measures beyond those discussed. No warranty, either expressed or implied, is given. This report simply provides our professional opinion based on the information presented to us at the time the report was prepared.

LOCATION MAP:

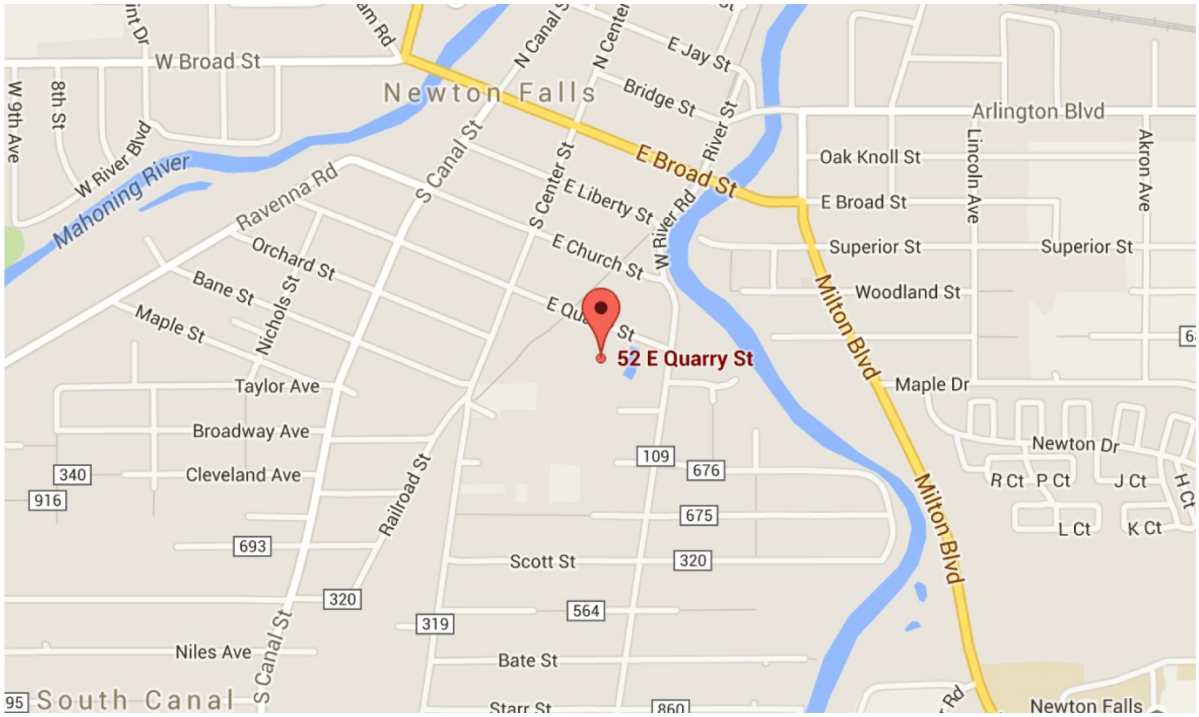

LOCATION SATELLITE:

ZONING CLASSIFICATION:

52 East Quarry Street; Newton Falls, Ohio 44444 is located in the City of Newton Falls is located in an R-8 Residential District.

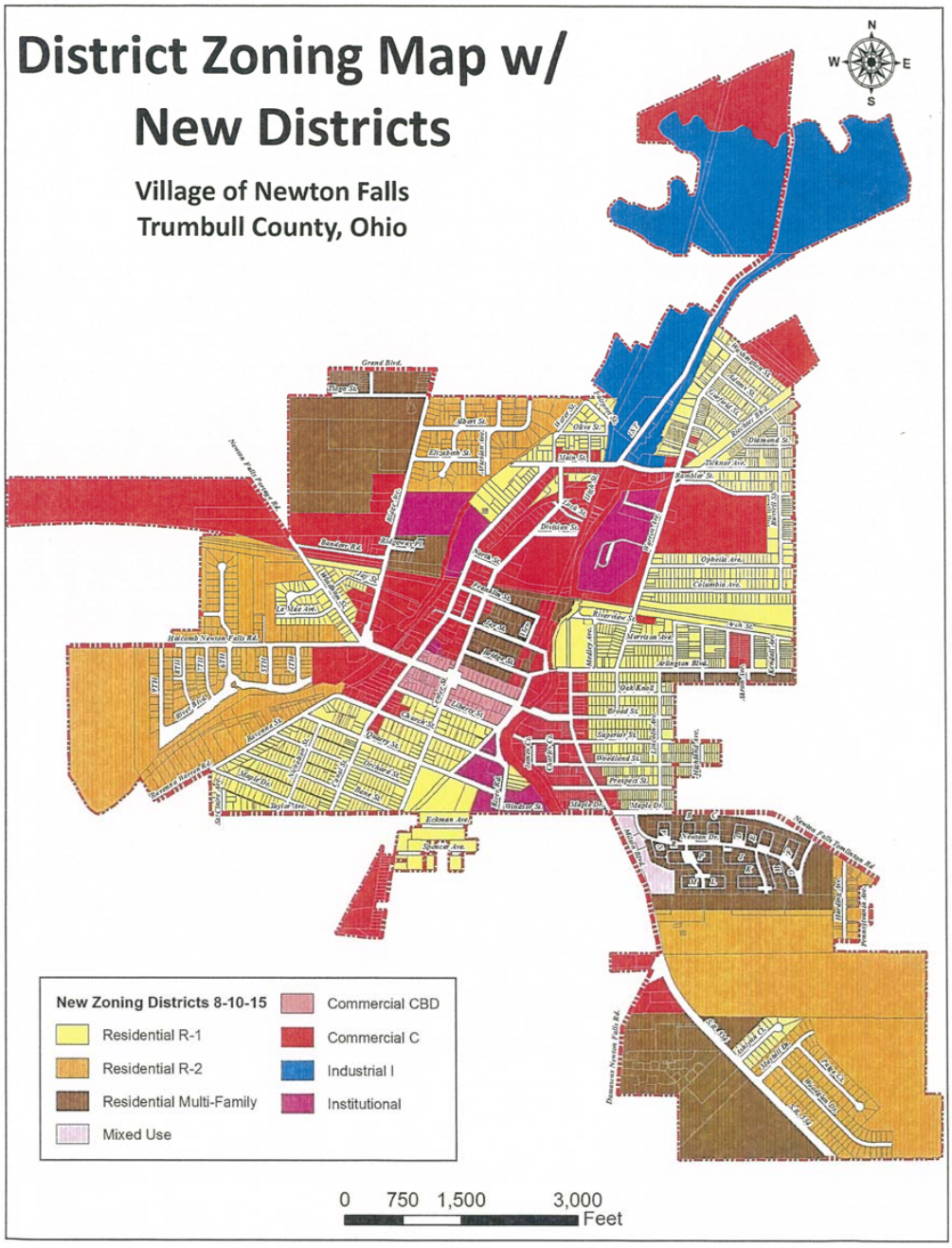

See Appendix A for additional information.

BUILDING CODE:	2011 Ohio Building Code (OBC)	
USE AND OCCUPANCY:	A-3; Assembly	
CONSTRUCTION TYPE:	5B	
BUILDING HEIGHT:	1 story	(allowable)
	1 story	(actual)
BUILDING AREA:	6,000 square feet	(allowable)
	11,800 square feet	(actual)
OCCUPANT LOAD:	480 people	
CALCULATED EGRESS WIDTH:	96 inches	(480 people; 0.2 inch / person)
MAXIMUM TRAVEL DISTANCE:	200 feet	
COMMON PATH OF EGRESS:	75 feet	
CORRIDOR FIRE RESISTANCE:	1 hour fire rating (serving more than 30 people)	
PLUMBING FIXTURES:	water closets (male):	4 minimum
	water closets (female):	6 minimum
	(assuming no more than 2/3 female occupancy at any given time)	
	lavatories (male):	3 minimum
	lavatories (female):	3 minimum
	drinking fountains:	1 minimum
	service sinks:	1 minimum

BUILDING CODE NON-COMPLIANCE:

The existing facility is constructed with two (2) different construction types: Type 4, heavy timber and Type 5B, wood (unprotected). For the purposes of this study, the assumed construction type for the entire facility was type 5B. This assumption was made because no fire wall exists between the two (2) different construction types.

The “actual” square footage of the facility well exceeds the “allowable” for this type of construction (Type 5B) per the Ohio Building Code (OBC). In order to rectify this, a square footage increase is required. This is achievable by installing an automatic fire protection system. (See FIRE PROTECTION.)

The building also does not have the required amount of plumbing fixtures for the occupancy load for the facility per the Ohio Building Code (OBC).

See Appendix B for additional information.

LIFE SAFETY CODE:	2012 Life Safety Code; NFPA 101
USE AND OCCUPANCY:	Assembly
CONSTRUCTION TYPE:	V(000)
BUILDING HEIGHT:	1 story permitted for occupant loads of 1000 or less
OCCUPANT LOAD:	480 people
NUMBER OF EGRESSES:	not less than 3
MAXIMUM TRAVEL DISTANCE:	200 feet
COMMON PATH OF EGRESS:	75 feet
EMERGENCY LIGHTING:	required
FIRE DETECTION:	required
FIRE PROTECTION:	required
COOKING EQUIPMENT:	in compliance with NFPA 96; “Standard for Ventilation Control and Fire Protection of Commercial Cooking Operations” (not reviewed for the purposes of this study)
INTERIOR FINISHES:	Class A or Class B
REQUIRED SIGNAGE:	occupant load postings evacuation diagram postings no smoking signage

LIFE SAFETY CODE NON-COMPLIANCE:

In order to determine if the existing facility meets current code requirements, a full review of NFPA 13; “Standards for the Installation of Sprinkler Systems” is required.

In order to determine if the existing kitchen meets current code requirements, a full review of NFPA 96; “Standard for Ventilation Control and Fire Protection of Commercial Cooking Operations” is required.

Signage is not installed per NFPA 101; “Life Safety Code”.

See Appendix C for additional information.

ACCESSIBILITY GUIDELINES:	2010 ADA Standards for Accessible Design
USE AND OCCUPANCY:	Assembly Area
ACCESSIBLE ROUTES:	provide a minimum of 60% of public entrances provide from stage to auditorium floor
PARKING SPACES:	per table 208.2 provide a minimum of (1) van accessible space provide required signage and post fines spaces shall adjoin an accessible route
DOOR CLEARANCES:	per figure 404.2.4.1
DOOR HARDWARE:	provide ADA compliant (lever style) door hardware
RAMP:	slope shall not exceed 1:12 provide landings at top and bottom provide edge protection provide handrails both sides (and guardrails per OBC)
PLUMBING FIXTURES:	install fixtures at ADA compliant heights provide required clearances at all fixtures provide required turning space and clearances in toilet rooms provide grab bars install accessories at ADA compliant heights provide a minimum of (2) drinking fountains
FIRE ALARM SYSTEMS:	provide permanently installed audible and visual alarms
SIGNAGE:	provide tactile characters for signage (as required)
DETECTABLE WARNINGS:	provide a surface of truncated domes

ADA STANDARDS NON-COMPLIANCE:

The number of public entrances does not meet the required number of accessible routes. The main entrance ramp does not meet current ADA Standards. All other entrances are also non-compliant.

The required number, type, and configuration of accessible parking spots need to be reviewed.

The required door clearances, corridor widths, and turning clearances are not provided in some areas. Signage is not installed per ADA Standards.

The fire alarm system does not meet ADA Standards.

See Appendix D for additional information.

LOCATION:

52 East Quarry Street; Newton Falls, Ohio 44444

SITE ACCESS:

The existing facility is accessed by East Quarry Street. East Quarry Street can be accessed from West River Road or South Center Street.

SITE AND FACILITY DESCRIPTION:

The Newton Falls Community Center is located on property owned by the City of Newton Falls. Currently there are baseball fields to the west, a detention pond to the east, and a playground to the south of the facility.

west – baseball fields

east – detention pond

south - playground

An access drive wraps around the building with parking adjacent to the building. The drive is in poor condition and needs to be repaved and/or replaced. The number of overall parking spaces is inadequate for the facility and ADA accessible parking needs reviewed.

east drive – patching at parking area

west drive - deterioration

SITE AND FACILITY DESCRIPTION (continued):

southwest drive – deterioration

south drive – cutting and patching

* This is a general overview of the site. A full site review was not performed for this study. A full site review should be performed by a civil engineer for review of site drainage and compliance with current stormwater management requirements.

BUILDING HISTORY:

The Newton Falls Community Center was dedicated on January 18, 1942. Prior to being dedicated as a community center, the structure was constructed as a USO facility.

The building was constructed under what was presumably the code standard for that time period. Today we have more stringent building code requirements governing new structures and alterations to existing structures. One major challenge faced by structures built before these more restrictive codes were adopted is attaining an acceptable level of compliance to ensure safety of the structure. Many of these older structures will have some portions constructed that comply with today's requirements, while other portions do not comply. In the end, the building stood the test of remaining largely intact through many years of service. While it's likely, with some rehabilitation, this structure will continue to function into the future, the longevity is difficult to predict.

FOUNDATION:

The foundation is comprised mainly of concrete masonry with some clay masonry intermixed. The building is built largely over a crawl space with exposed soil floors. There is a partial basement below a portion of the western edge of the building serving as an old mechanical space. The basement foundation walls are clay (brick) masonry.

The foundation of the building shows some signs of deterioration around most of the exposed perimeter. The concrete masonry units and the mortar joints show some moderate deterioration on the exposed, exterior face. This deterioration is likely from many years of moisture infiltration. This issue is not an imminent threat, however, left alone, this problem could quickly progress into a serious issue.

deterioration of the existing foundation wall

Another problematic area of the foundation is along the west wall of the auditorium. The foundation is displacing outward presumably from the thrust associated with the heavy timer frames. Access to the crawl space below the floor was not available during our site visit, leaving the cause and severity of the problem to speculation. This issue could be significant and require major corrective action. Further investigation is required, should the building remain in use.

area of foundation laterally displacing

ROOF STRUCTURE:

The roof structure for the main portion of the building consists of pitched wood roof trusses on wood bearing walls. The pitched roof trusses appear to have been added to the building, as an original flat roof structure was found between the trusses and the ceiling space. This was likely done to mitigate leaks that may have been problematic in the original flat roof design. The truss roof structure looks to be sound and intact. The structure of the roof in the assembly area is a heavy timber, rigid frame system. The roof is higher and pitched to provide drainage. This appears to be original to the building. The structure itself shows no major signs of problems or deterioration.

heavy timber framing in the auditorium

FLOOR STRUCTURE:

The floor structure is comprised of wood joists spanning between perpendicular masonry walls. The floor structure in the front areas appears to be in good condition with little sign of damage or deterioration. For the most part, the floors appear to be level with the exception of the southeast corner of the auditorium. The floor slopes noticeably to the southeast at the eastern end of the stage. This slope is presumably from a foundation settlement. While this isn't necessarily an immediate concern, the cause of this deformation was not obvious on visual inspection. Without determining a cause, this deformation is unpredictable and may pose a risk in the future.

floor sloping in the auditorium

WALL STRUCTURE:

The walls appear to be wood framed bearing walls in the majority of the building. The auditorium has what seems to be wood framed curtain walls spanning between the heavy timber frames. The walls look to be in good condition with the exception of one location in the auditorium. There is an area of wall along the west side in the auditorium that is displacing (bowing) outward. The displacement is visible from the exterior and appears to be at a heavy timber frame. It is not known how long this displacement has been in the wall or the exact cause; therefore, the severity of the problem is difficult to predict.

area of bowing wall in assembly area

STRUCTURE SUMMARY:

Overall the building structure appears to be sound with no major signs of deficiencies or deterioration. There are some areas that will require further investigation and remedial action to correct deficiencies. The foundation walls around the entire building will need to be investigated further and corrected as needed. The bowed section of wall in the assembly area will need to be investigated and remedial action may be required. The foundation wall under the assembly area will need further investigation to determine the extent and potential cause of the outward displacement.

FOUNDATION WALLS:

Exposed foundation walls are masonry. Walls are starting to show signs of deterioration. Damaged blocks should be removed and replaced and joints should be tuckpointed. There are also a number of grates and boarded openings in the foundation walls. Animals are currently finding their way into the crawlspace of the building through some of these openings. Use and need of these penetrations should be reviewed. If penetrations are not required, openings should be filled with new masonry.

damaged masonry and boarded up openings

EXTERIOR WALLS:

Exterior walls are vinyl sided. Numerous damaged locations were identified around the perimeter of the building (both at corners and in the field). Siding appears to have met its life expectancy.

damaged vinyl siding corners

EXTERIOR WALLS (continued):

damaged vinyl siding

Vinyl siding substrate nor the amount of building insulation was determined due to concealed conditions. Based on visual observations, however, one can speculate that the walls are not properly insulated. In addition, rather than removing abandoned doors and windows and properly infilling the wall openings, vinyl siding was installed over the abandoned units left in place.

vinyl siding installed over abandoned door

vinyl siding installed over abandoned window

The Owner stated at the time of our visit that there have been problems in the past with black mold in the exterior walls. Although these areas have been addressed when identified, one can speculate that there could be similar conditions found in other areas of the building.

EXTERIOR WALLS (continued):

As mentioned, it appears that the existing vinyl siding has met its life expectancy. The existing vinyl siding, trim, and associated underlayment should be removed and replaced. Once exposed, the existing wall sheathing should be inspected for damage and replaced as required. Due to concealed conditions, no testing for black mold was performed at the time of this report.

It is recommended that new vinyl siding similar to Certainteed Monogram Double 4” Clapboard be installed over Tyvek Commercial Wrap. All outside and inside corners, doors, and window openings should be properly trimmed. It is also recommended that a pvc skirtboard be installed.

At the time of replacing the vinyl siding, it is also recommended that any abandoned doors or windows be removed and infilled properly. In addition, some destructive investigation should be performed to determine if there are other areas of black mold and if the walls are properly insulated. Current code requires a minimum R-value of R-19.

EXTERIOR WINDOWS:

There is a combination of fixed and double hung windows throughout the facility. The windows appear to have met their life expectancy. Numerous areas of exterior and interior damage were identified.

deteriorating windows (exterior)

There are also areas on the interior face of the windows where there is evidence of black mold.

deteriorating windows (interior) with evidence of black mold

EXTERIOR WINDOWS (continued):

The Owner also stated that there is a problem with air infiltration throughout.

It is recommended that windows be replaced at the same time of re-siding the building and repairing exterior walls to ensure a complete and proper installation. Picture and/or double hung windows similar to Andersen 400-Series or A-Series windows should be considered.

EXTERIOR DOORS:

The existing front doors are a fully glazed aluminum storefront system and appear to be in fair condition. Doors need to be serviced to ensure that they are working properly. Openings will also need to be modified as required for installation of a new card access system and other security system components (see SECURITY SYSTEMS).

Other man doors are hollow metal while some are wood. Those doors should be replaced with new galvanized, insulated hollow metal doors and frames at the same time of re-siding the building and repairing the exterior walls. Install proper weather stripping as well as ADA compliant door hardware and panic devices. Door hardware should accommodate for installation of a new card access system and other security system components (see SECURITY SYSTEMS).

RAMP:

There is an existing wood ramp constructed over the original concrete stairs at the main entrance of the building. The ramp does not meet current codes. The slope of the ramp appears to be greater than what is allowed, required landings have not been provided, and the railing is also non-compliant with current codes. In addition, the Owner stated that there have been problems with the slickness of the wood, therefore, they laid down a rubber material to help alleviate some of the problem.

existing wood ramp constructed over concrete stairs

required landing not provided at the top of ramp

It is recommended that the existing wood ramp be removed as well as the original concrete stairs and a new concrete ramp be constructed. The ramp will need to be reconfigured to allow for the installation of a landing at the top and bottom of the ramp as well as any intermediate landings required to meet current codes. New guardrails and handrails will also need to be installed.

RAMP (continued):

With the replacement of the ramp, the canopy currently covering the ramp, will need to be removed and replaced as it is anchored into the ramp guardrail.

existing roof canopy

ROOF:

The existing roof is a pitched asphalt shingle roof. It is assumed that the shingles are installed over roofing felt and wood sheathing. It is unknown if ice and water barrier (shield) is properly installed and if all current code venting requirements are met.

front of building

rear of building

It appears that the existing shingled roof has met its life expectancy. The existing shingles and associated underlayment should be removed and replaced. Once exposed, the existing roof sheathing should be inspected for damage and replaced as required. In addition, current roof venting requirements should be reviewed prior to the installation of a new roof.

It is recommended that a new architectural shingle similar to Owens Corning Oakridge Shingle be installed over the proper underlayment. Ice and water barrier should be installed per current code requirements including but not limited to roof edges and valleys. All penetrations and change of plane should be flashed properly. Vents should be installed as required. New metal drip edge, aluminum gutters, downspouts, and vinyl soffit should also be installed. Replacing and/or installing new roof insulation should also be considered at the time of roof replacement. Current code requires a minimum R-value of R-30.

SERVICE ENTRANCE:

There is a service entry for the auditorium at the southeast of the building. The ramp is deteriorating and does not meet current codes. The railing also does not meet current codes. This ramp should be replaced and reconfigured as required to meet current codes.

ramp at service entrance

unused wood deck

Also located at the southeast service entrance is a small wood deck. The deck appears to be unused. It is recommended that the deck be removed and the door be removed and infilled at the time of the siding being installed.

OTHER ENTRANCES:

There is a side entrance at the kitchen and an emergency (fire) exit at the southwest corner of the auditorium. A landing is required at the top of and bottom of the kitchen entrance stair. The stair should be reconfigured to meet current code. Also, neither the handrails at the kitchen entrance nor the auditorium exit meet current codes. Handrails should be replaced.

kitchen entrance

auditorium emergency exit

ABANDONED ACCESS:

It appears that there used to be a set of stairs (external to the building) that accessed the basement and that the stair opening was filled with concrete at some point. This assumption is being made based on evidence of a perimeter concrete barrier / support wall infilled with concrete along the west side of the building.

abandoned basement stairwell

This presumed stairwell will need to be removed at the time of waterproofing the basement walls.

BASEMENT:

The building has a partial basement with a single access point. It houses mechanical and electrical equipment as well as a sump pump.

The basement has known problems of flooding which is evident by water stains on the masonry (to a height of almost 5'-0" in some areas) as well as with the rusted equipment.

water stains on masonry (above); submerged equipment (below)

It is recommended that the walls be inspected and repaired as required. In addition, the ground outside should be dug done to footer depth and out a distance of approximately 5'-0" in order to address the water infiltration issues. It is recommended that a moisture protection system be installed on the perimeter walls (full height) similar to Carlisle CCW Miradrain 6200 Moisture Protection System with CCW Miradri 860/861 Waterproofing Membrane. #57 slag rock should be installed full depth around the perimeter approximately 24" out of the face of the wall to allow for water movement and the installation of new footer drains should be reviewed.

There is also a large amount of damage to the ceiling and evidence of asbestos.

BASEMENT (continued):

A pipe enters the basement from the outside just above the finished floor. It is possible that the pipe is dumping storm water into the building. This was not able to be confirmed, however, a large deposit of sludge was found at the pipe indicating iron oxide.

iron oxide deposits

The basement also accesses a crawl space located below the main building. The crawl space has exposed wood floor trusses above with exposed dirt below. Due to this condition, the exposed wood is susceptible to moisture from the ground which could potentially cause the growth of black mold and/or create an environment that aids in the premature rotting of wood. At the time of our site visit, there was no standing water evident in the space, however, it was damp.

crawl space below main building

The Owner stated at the time of our visit that there have been problems with rot of the floor substrate further indicating a moisture concern of the unfavorable condition.

BASEMENT (continued):

A comprehensive inspection of the existing floor trusses and floor substrate should be performed in addition to testing for evidence of black mold. In addition, further investigation and research is needed to determine the best approach in dealing with and addressing the adverse conditions. At minimum, it is recommended that a vapor barrier be installed over the dirt and covered with a minimum of 3” (depth) of #57 slag rock.

INTERIOR ENVIRONMENT:

Interior walls are wood stud construction with a plaster and/or gypsum board finish. Ceilings are predominantly acoustic panel lay-in. Some areas were unfinished and evidence of water damage was found.

unfinished, unusable space

water damage at ceiling

water damage at toilet partitions in toilet room

As previously mentioned, the Owner stated that there have been ongoing findings of water damage, black mold, and rot in concealed spaces including but not limited to the walls and floors. Again, due to concealed conditions, no testing for black mold was performed at the time of this report.

INTERIOR ENVIRONMENT (continued):

All interior finishes should be replaced. Finishes are required to be Class A or Class B. Classifications for the existing finishes are unknown.

Existing lobby finishes include acoustic panel ceiling, paint, and vinyl composition tile (VCT). The lobby should receive new acoustic panels similar to USG Astro Climaplus and the existing grid should be painted or replaced, walls should be painted, and luxury vinyl flooring (no-wax, low maintenance) similar to Centiva Santorini Tandem should be installed. The vestibule should receive new paint and walk off material (carpet tile) similar to Mannington Take Back. The existing subfloor should be inspected and replaced as required at the time of the floor finish being replaced.

lobby space

Existing activity room finishes include acoustic panel ceiling, paint, and carpet. Carpet is stained and worn throughout. Activity rooms should receive new acoustic panels similar to USG Astro Climaplus and the existing grid should be painted or replaced, walls should be painted, and carpet tile installed which will allow for replacement of carpet tiles as needed so that staining does not become an overall problem again. The existing subfloor should be inspected and replaced as required at the time of the floor finish being replaced.

activity rooms

Existing office finishes include acoustic panel ceiling, paint, and carpet. Offices should receive new acoustic panels similar to USG Astro Climaplus and the existing grid should be painted or replaced, walls should be painted, and carpet tile installed. The existing subfloor should be inspected and replaced as required at the time of the floor finish being replaced.

INTERIOR ENVIRONMENT (continued):

Existing back of house should receive new acoustic panel ceiling similar to USG Astro Climaplus and the existing grid should be painted or replaced, walls should be painted, and luxury vinyl flooring (no-wax, low maintenance) similar to Centiva Santorini Tandem should be installed. The existing subfloor should be inspected and replaced as required at the time of the floor finish being replaced.

Existing toilet rooms are acoustic panel ceilings, vinyl wall covering, and vinyl composition tile (VCT). Toilet rooms should be reconfigured to meet current codes. (See TOILET ROOMS). New finishes should include new acoustic panels similar to USG Astro Climaplus and grid. Ceramic tile should be installed on the walls and the floors. The existing subfloor should be inspected and replaced as required at the time of the floor finish being replaced. All existing drywall should be removed and replaced with cement board or hardi-board prior to receiving new finishes. Code requires a non-permeable wall finish on all plumbing walls in a public use toilet room. Existing toilet partitions should be replaced.

men's toilet room

women's toilet room

Finishes in the gymnasium include an acoustic panel ceiling, paint, and a wood floor. The room should at minimum be repainted and the wood floor should be replaced with luxury vinyl tile (no-wax, low maintenance). Although not a necessity, it is recommended that the ceiling grid be painted (and/or replaced) and the acoustic panels (tiles) be changed out. (See AUDITORIUM).

auditorium (overall)

damaged wood floor

INTERIOR ENVIRONMENT (continued):

Existing finishes in the kitchen include acoustic panel ceiling, a combination of wall panels and paint, and vinyl composition tile (VCT). New finishes should include gypsum faced ceiling tiles (and FDA approved ceiling grid), stainless steel panels on all cooking walls and at dishwashing, fiberglass reinforced panels (FRP) on all remaining walls, and quarry tile on the floor. The existing subfloor should be inspected and replaced as required at the time of the floor finish being replaced. (See KITCHEN).

kitchen (overall)

FUNCTION OF THE SPACES:

The function of the space was discussed with the Owner in detail. In general, the Owner stated that the facility meets the current basic needs of the community, however, there are a number of downfalls with the current layout:

the lobby is oversized and unused space

the stage in the auditorium is unused

unused, unconditioned space

FUNCTION OF SPACES (continued):

It is recommended that the lobby be reconfigured to create usable space as well as conditioning and finishing off unused storage spaces. The option of removing the stage in the auditorium to create more usable space should also be reviewed.

With there being a single entrance to the facility, the Owner stated that they are unable to hold multiple events at the same time. It is undesirable to have people walking thru the lobby space if there is an event being held “up front”. It is recommended that a separate entrance be provided for the auditorium.

AUDITORIUM:

With exception to the unused stage, the auditorium functions well and is highly used.

The Owner stated that it would be nice if the space was larger and able to be subdivided to allow for multiple events as well as providing space for exercise classes without prohibiting the use of the space for anything else.

At times, the actual occupancy exceeds the allowable occupancy (per code). Removing the unused stage would increase the allowable occupancy for the room.

STAGE:

The stage appears to be a wood structure with a wood floor accessed at each end by a pair of wood stairs. The stage is separated from the main auditorium by a proscenium wall. The Owner stated that the stage is generally unused.

HVAC runs under the stage and is fed from the overhead air handlers behind the proscenium wall.

stage front and proscenium wall (with curtain)

The existing stage and proscenium do not appear to meet current codes. In addition to an automatic fire protection system, roof vents and smoke control should be provided.

STAGE (continued):

It is recommended that the stage and portion of proscenium wall be removed and the floor area be utilized to increase the usable square footage of the auditorium.

HVAC will need to be reworked into the room and the existing storage areas at each end of the stage may need to be reconfigured.

ACTIVITY ROOMS:

The two front activity rooms are highly used and function well. The third activity room (adjacent to the kitchen), however, is barely used. The lack of use is in part due to animals getting into the crawl space below and causing odors and in part to the adjacent kitchen also causing odors as well as causing leaks into the room due to pipes clogging.

TOILET ROOMS:

The toilet rooms should be reconfigured to meet current ADA requirements for accessibility and to accommodate the number of fixtures required by the Ohio Building Code (OBC).

It is recommended that the existing women's toilet room and men's toilet room be switched. The existing women's toilet room (new men's toilet room) would be reconfigured to accommodate the required number of plumbing fixtures. The existing men's toilet room (new women's toilet room) would need to be enlarged by moving the south wall. The enlarged room would be configured to accommodate the required number of plumbing fixtures. Access to the room also needs to be reviewed.

KITCHEN:

The Owner stated that the kitchen does not function well. The equipment is outdated and inadequate. In addition, the kitchen is not commercial grade and makes it virtually impossible for the facility and/or a caterer to be able to use the facility to prepare food.

kitchen (overall)

KITCHEN (continued):

stove / oven

handwashing

hood

The existing hood does not meet current code (see MECHANICAL SYSTEMS). Both a grease trap and food interceptor are also required (see PLUMBING SYSTEMS).

There is also an existing skylight in the kitchen leaks and should be removed. The existing roof should be infilled appropriately.

skylight

It is recommended that a review be done with the Owner to determine the desired use of the space (i.e. warming kitchen, catering kitchen, cooking kitchen, etc) and equipment requirements. After determining what type of kitchen is desired and equipment is selected, alternative layouts should be explored.

MECHANICAL SYSTEMS:

The HVAC systems that currently serve the building include four (4) gas fired furnaces with remote condensing units of varying sizes serving the administration, classroom and kitchen areas of the building. There are also two (2) air handlers with gas fired duct heaters serving the existing auditorium.

The existing furnaces serving the administration areas were manufactured in 1996 and are nearing the end of their useful life expectancy. The typical life expectancy of a residential furnace is usually around 20 years. The furnaces appear to be in good operational condition and all equipment was operational at the time of the walk-thru. It appears that adequate outside air is supplied to the existing units.

existing furnaces (above and below)

existing condensing units

3-ton condensing units

MECHANICAL SYSTEMS (continued):

As previously mentioned, the auditorium is currently served by two (2) air handlers that utilize gas fired duct furnaces for heat and Dx cooling for the air conditioning. From the serial numbers on these units it appears that this equipment was replaced about five (5) years ago and is in good operational condition. The typical life expectancy of this equipment is between 15-20 years.

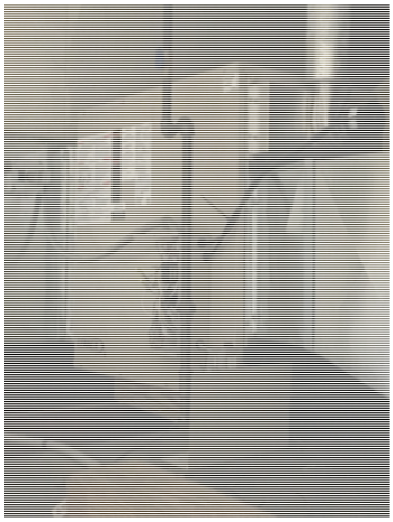

gas fired duct furnace

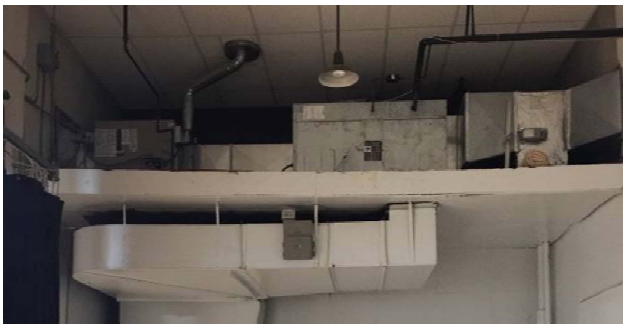

3000 cfm air handler with gas heater

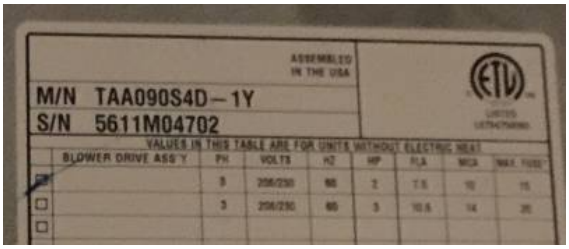

AHU model/ serial number

7 1/2 ton condensing unit

7 1/2 ton condensing unit model/serial number

MECHANICAL SYSTEMS (continued):

Currently serving the kitchen is one exhaust hood installed over a six burner range. The current exhaust hood is a heat removal (type II) hood with a propeller type inline fan installed in the side of the hood. The existing ductwork from the hood appears to be standard galvanized sheet metal and does not have sufficient cleanouts for grease removal and/or cleaning. There is not a fire protection system installed in the hood and no make-up air for the space. This hood also appears to be original to the building and does not meet the current codes for a kitchen installation of this type or usage. For this application, the current code requires a type I grease hood to be installed over any range with six (6) or more burners. With this requirement, welded steel ductwork with cleanouts and along with an ansul fire protection system is required.

exhaust ductwork and hood

existing type II hood

Abandoned in the basement is a large American Standard steam boiler. It appears that the boiler was original to the building and has been decommissioned for many years. It is unknown the age of the boiler, but typically with boilers over 40 years old, the insulation that was used for the assembly of the cast iron sections contained asbestos. It appears that this boiler is over 30 years old and it should be tested for asbestos before being considered for removal.

existing boiler

MECHANICAL SYSTEMS RECOMMENDATIONS:

The existing systems serving the kitchen area of the building are extremely antiquated and need to be upgraded. The existing exhaust hood does not meet the intent of the current building or life safety codes nor is it the correct type of hood for the application. The hood should be replaced with a type I grease hood should be installed as well as an ansul protection system.

The existing systems serving the administrative portions of the building appear to maintained well but are nearing the end of their expected life and may need to be addressed in the upcoming years.

The existing systems serving the auditorium are in good condition and should be adequate for another 10-15 years as long as good maintenance practices are followed. All equipment was noted as having adequate ventilation air and appears to meet the current codes.

PLUMBING SYSTEMS:

The existing plumbing systems that are currently serving the building appear to be a mix of original equipment and equipment replaced within the last 20 years.

The kitchen area of the building appears to have original fixtures that are tied into the existing sanitary systems. At the time of the walk-thru a grease trap and food interceptor could not be identified and are required for a kitchen of this usage type. Another deficiency noted in the kitchen area is that on the existing range there is not a shunt trip gas shut off that isolates the gas supply to the range in the event of a fire.

gas line serving oven/stove

The hot water system serving the kitchen area is directly connected to the existing fixtures without a tempering valve and it is not apparent that the supply water temperature is adequate for washing dishes.

kitchen hot water heater

PLUMBING SYSTEMS (continued):

Typically kitchen hot water is used for this type of application and this water is utilized at 140 degrees. All other fixtures within this area should be tempered down to approximately 120 degrees for hand washing and other usages.

three bowl sink

dish washing area

The Owner also stated that there have been numerous issues with kitchen pipes clogging in the past and causing problems in the adjacent activity room.

There is a single hot water heater that supplies the common areas. It is located in the housekeeping closet above a wall mount mop sink. Again, with the central hot water supply to these fixtures there doesn't appear to be any tempering valves which is a code requirement.

existing hot water heater

housekeeping closet

PLUMBING SYSTEMS (continued):

For the common areas of the building, the plumbing fixtures appear to be in fair condition. Most of the fixtures appear to have been updated within the past 20 years. It was noted that one of the sinks located in the men's toilet room was loose and needed to be secured to the wall.

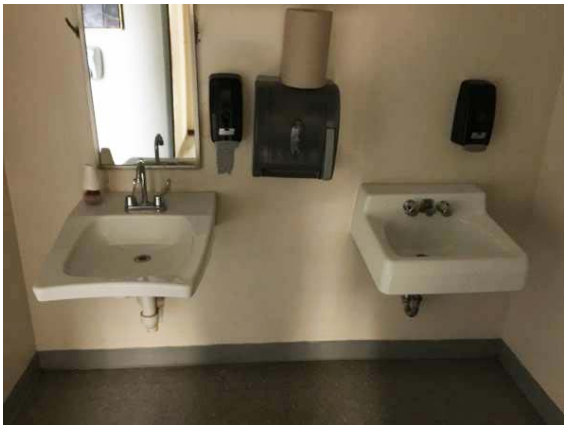

existing women's toilet room

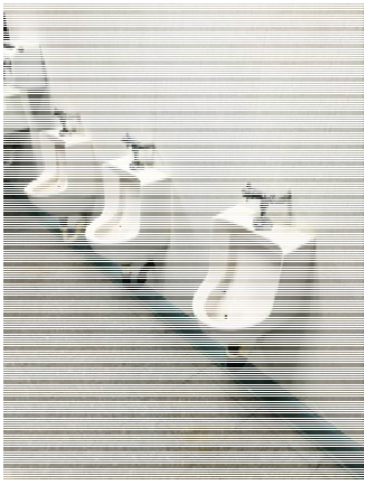

existing men's toilet room

PLUMBING SYSTEMS RECOMMENDATIONS:

The existing systems serving the kitchen area are extremely antiquated and need to be upgraded. Both the gas and plumbing systems are original to the building do not meet the intent of the current building or life safety codes.

The existing plumbing systems throughout the facility appeared to be in fair condition with some upgrades being required. The existing fixtures found throughout the spaces appear to be in good condition with most of the fixtures being operable. The first item that needs to be addressed is the fact that there is not a grease trap and food interceptor installed to protect the kitchen sanitary system. Without a grease trap, all the byproducts produced during the cooking process are potentially discharged down the drain and will cause issues with pipe blockages.

Another issue that should be addressed is the need for tempering valves on all of the hot water supply systems. This is the only way to insure that the proper water temperatures are being supplied to the proper fixtures.

At the time of the walk though, it was not known what the current conditions of the existing sanitary system are. It appears that this system is most likely original to the building, and due to buildings age, it is assumed that the infrastructure is in fair to poor condition. It would be a good idea for the owner to have the existing drain lines scoped with a camera to identify any possible issues within the drainage systems.

FIRE PROTECTION SYSTEMS:

The building currently does not have an automated fire protection system.

An automatic fire protection system should be installed in compliance with NFPA 13, “Standards for the Installation of Sprinkler Systems”.

ELECTRICAL SERVICE:

The existing structure is currently served by a single 600-amp, 208Y/120V, 3-phase, 4-wire overhead electrical service which is fed from Utility Company owned pole mounted transformers located on the north side of East Quarry Street. Overhead service conductors are run from the transformers along the west side of the property via two (2) wooden Utility Company service poles. The electrical service enters the building by way of one (1) 4” overhead service mast and extends to a single 600-amp, 208Y/120V distribution panel with a 600-amp main circuit breaker. The main 600-amp distribution panel feeds multiple HVAC units as well as a number of branch circuit panelboards located within the basement and on the first floor of the building. These branch circuit panelboards feed lighting, receptacles and miscellaneous equipment throughout the structure.

Note: Typically, for a 600-amp service (or feeder), 2-sets of 350MCM conductors are installed in two (2) parallel conduits; however the existing service entrance conductors are installed in a single conduit. At the time of our field survey we were unable to accurately verify the exact size of the service entrance conductors and future investigation by a licensed Contractor may be required to ensure that the conductors are properly sized and that no Code violations are present with respect to the existing installation.

It is recommended that the electrical service be upgraded to ensure that adequate electrical service capacity is available to serve the needs of the facility.

ELECTRICAL DISTRIBUTION SYSTEM:

The existing panelboards and electrical equipment located in the basement are in poor physical condition and appear to be original to the building. There are signs of significant water damage to most equipment throughout the basement and it appears that some of the electrical equipment may have been partially submerged due to flooding within the basement. The existing panelboards do not have covers installed and live or energized parts (buses, conductors, lugs, etc.) are clearly exposed which can create a potentially hazardous situation. The existing panelboards along the west wall have two (2) conductors terminated in a single lug in order to feed additional equipment. The existing lugs appear to be only rated for a single conductor and the observed conditions may be a violation of NFPA 70 (National Electrical Code) Article 110.14(a).

electrical panel water damage

exposed electrical panel

panel lugs

ELECTRICAL DISTRIBUTION SYSTEM (continued):

The existing panelboards located on the first floor are in decent physical condition. There are no available spaces for future expansion and it appears that the panelboards are loaded to near capacity.

120V convenience receptacles (outlets) are located throughout and appear to be original to the building. Most devices appear to be in satisfactory condition and working order. Certain receptacles throughout the main lobby exhibit signs of arcing or tracking on the faceplate which could indicate that the receptacles or possibly the existing wiring are faulty. While discussing this discovery with the staff, they had indicated that these receptacles would sporadically "spark" or "flash" without any device plugged into the receptacle. This phenomenon could prove to be a fire hazard if the situation persists and should be analyzed and rectified by a licensed Contractor.

Note: It is possible that the arcing from the receptacles may be simply due to faulty equipment which has degraded over time and replacing the devices may rectify the situation. In contrast, this phenomenon could also be stemming from faulty wiring due to degradation over time or situations where the wiring has been subjected to water or rodent damage. At the time of our field survey, no apparent signs of faulty wiring were visually observed, however, the cabling should be tested by a licensed Contractor utilizing appropriate testing methods and meters to verify the current integrity of the cabling.

It is recommended that the existing panelboards be replaced during any future addition or renovation project which may take place to ensure that adequate electrical service capacity is available to serve the needs of the facility.

Due to the existing conditions of the electrical equipment and the overwhelming evidence of flooding within the basement, a serious and potentially life threatening electrocution hazard may be created should occupants enter the basement upon signs of flooding. It is strongly recommended that no building occupant (staff or the public) enter the basement upon signs of flooding until the water infiltration issue can be rectified and the electrical equipment has been deemed safe.

FIRE ALARM SYSTEM:

A non-addressable, analog type Simplex 4001 fire alarm system is currently installed within the building. This system includes manual pull stations, ceiling mounted smoke detectors and notification devices (horn/strobes) located throughout. At the time of our field survey, no evidence was found to indicate that the system was in a functional state. Upon closer review of the Fire Alarm Control Panel, the system appears to be currently out of service or at least in a partially incapacitated state.

existing fire alarm panel

It was observed that the control panel's AC Power LED was not illuminated to indicate that building power is available to the system which may be due to either lack of building power to the control panel or a faulty LED indicator. Additional investigation by a licensed Contractor may be required in order to verify the current status of the system.

The Code required stand-by (back-up) batteries within the cabinet do not show evidence that they have been properly maintained or replaced to ensure proper operation of the system. The stand-by batteries are required to be in a continuous functional state in order to keep the system operational in the event of a power failure within the building.

Based on the building Use Group (A-3, assembly) and maximum allowable number of occupants within the building, as defined by the Ohio Building Code, the existing fire alarm system does not meet current code requirements as prescribed by the Ohio Building Code, International Fire Code or NFPA 72. In reviewing the number and locations of existing initiation (manual pull stations, smoke detectors) and notification (audible/visual) devices, it was determined that there is a current lack of the required number and spacing of Fire Alarm System devices necessary to fulfill all Code requirements. The existing fire alarm system currently utilizes horn type audible notification devices. Current codes require that speaker type notification devices be installed for buildings with an Assembly classification.

While discussing system operation with the staff, it was disclosed that the fire alarm system is currently not being monitored as required by a UL Certified Central Station to notify the local fire department or emergency personnel upon system activation.

It is recommended that the existing fire alarm system be completely replaced and upgraded during any building additions or renovations in the future to meet the current Ohio Building Code, International Fire Code and NFPA 72 requirements.

LIGHTING:

Interior lighting throughout the building consists of a mixture of 2x2 lay-in acrylic lensed troffers, 2x4 lay-in acrylic lensed troffers and strip fixtures. Most of the interior lighting had been recently replaced with energy efficient LED fixtures and appear to be in good physical condition and working order. In certain rooms, the light levels appear to be dim and actual footcandle levels within these rooms should be verified with a properly calibrated light meter to ensure that minimum IES (Illuminating Engineering Society) recommended light levels are present throughout the building.

There are existing wallpacks located on the exterior of the building for security lighting. The lenses of these fixtures are discolored and show signs of wear. It appears that the exterior lighting is controlled via photocells and we were unable to verify the working order and performance of these luminaires due to our field survey being performed during daylight hours.

A mixture of LED and incandescent exit signs are located throughout to define the means of egress from the building. The fixtures appeared to be in good condition and working order. It is recommended that all existing exit signs with incandescent lamps be replaced or retrofitted with LED lamps.

Emergency lighting throughout the building is provided by wall mounted battery packs with adjustable heads. The existing fixtures appear to be in satisfactory condition and original to the building. Certain fixtures did not appear to be fully operational or providing the rated lumen output necessary to achieve Code required emergency illumination levels. It is recommended that all existing emergency lights be replaced to ensure proper operation and additional be added to achieve a minimum of 1-footcandle along the egress paths.

No emergency lighting fixtures are currently located on the exterior of the building in the paths of egress as required by Code. It is recommended that remote emergency heads and internal battery packs be installed at each exterior door deemed as a means of egress to ensure compliance with current Building Codes.

SECURITY SYSTEMS:

There are currently no security systems installed in the facility. Security cameras should be located inside and outside of the building.

There is currently no card access system. Talking to the Owner, a card access system is desired for after hour use of the building.

ASBESTOS:

Diamond Environmental performed asbestos testing throughout the facility. Asbestos containing materials were identified (see APPENDIX E).

LEAD:

Diamond Environmental performed lead testing throughout the facility. Lead-based materials were identified (see APPENDIX E).

MOLD:

Mold testing was not performed at this time.

ADDITIONAL RECOMMENDED INVESTIGATIONS:

- site evaluation and civil review
- investigation of foundation walls for deficiencies
- investigation of displaced foundation (west wall of auditorium)
- investigation of foundation settlement (southeast corner of auditorium)
- investigation of the displacement of the west wall of the auditorium
- investigation of first floor trusses and substrate (crawlspace)
- investigation of wood exposed to open soil (crawlspace)
- scope drain lines for deterioration and potential issues with the drainage system
- verify electrical service to the building and sizing of conductors
- determine cause of receptacles (outlets) arcing or tracking
- test wiring and cabling as required
- verify lighting levels throughout the facility

ADDITIONAL RECOMMENDED TESTING:

- mold testing

SITE RECOMMENDATIONS:

- re-pave and/or replace access drive and parking lot
- install required ADA compliant parking

STRUCTURE RECOMMENDATIONS:

- address foundation masonry deterioration
- perform any required remedial work as a result of additional recommended investigations

BUILDING ENVELOPE RECOMMENDATIONS:

- replace asphalt shingle roof (see ROOF)
- replace vinyl siding (see EXTERIOR WALLS)
- remove and infill abandoned doors and windows
- re-finish and/or replace man doors (see EXTERIOR DOORS)
- replace exterior windows (see EXTERIOR WINDOWS)
- repair and waterproof exterior basement walls (see BASEMENT)
- reroute pipe in basement outside (see BASEMENT)
- address access points for animals to get under the building (see ACTIVTY ROOMS)

INTERIOR ENVIRONMENT RECOMMENDATIONS:

- see Diamond Environmental reports for recommendations relative to asbestos and lead testing performed (APPENDIX E)
- repair and waterproof exterior basement walls (see BASEMENT)

INTERIOR ENVIRONMENT RECOMMENDATIONS (continued):

- repair damaged ceiling membranes in basement
- finish unconditioned porch area
- remove stage
- rework kitchen to meet the Owners needs
- rework toilet rooms for ADA compliance and proper number of plumbing fixtures
- replace finishes throughout
- provide adequate fire extinguishers
- install ADA compliant door hardware and panic devices
- install ADA compliant signage

MECHANICAL SYSTEMS RECOMMENDATIONS:

- replace existing kitchen hood with a type I hood and ansul protection system
- provide adequate makeup air for the kitchen
- provide air to unconditioned porch used for storage
- verify if furnaces serving the administrative portions of the building need replaced
- remove abandoned equipment from basement

PLUMBING SYSTEMS RECOMMENDATIONS:

- install grease trap and food interceptor in the kitchen
- replace water heaters and all piping for the kitchen and toilet rooms
- install tempering valves on all of the hot water supply systems
- replace all plumbing fixtures with ADA compliant fixtures
- provide all required insulation on plumbing fixtures for ADA compliance
- install double water fountain
- scope and clean out all pipes to remain
- review gas system and install shunt trip gas shut off
- scope pipe infrastructure to the building and repair and/or replace piping as required

FIRE PROTECTION SYSTEMS RECOMMENDATIONS:

- install automated fire protection system throughout (dry) for square footage increase; system shall be installed in the basement, first floor, attic, and crawl spaces as required
- install ansul protection system at new kitchen hood

ELECTRICAL SYSTEMS RECOMMENDATIONS:

- upgrade electrical service
- replace panelboards
- replace fire alarm system
- replace light fixtures as required (see LIGHTING)

DESALVO
CONSTRUCTION
COMMERCIAL / INDUSTRIAL

April 11, 2016

The City of Newton Falls
19 North Canal Street
Newton Falls, Ohio 44444

Re: Probable Cost Summary for Newton Falls Community Center Renovation Project

As per your request, we are pleased to submit our thoughts relative to a probable cost summary for the above referenced project. After review of the existing conditions study documents prepared by *the workshop arch + design llc*, the undersigned proposes the following probable cost summary to furnish all labor, equipment and services necessary and required for recommendations proposed within the existing conditions study, as follows:

Scope of Work

1. Site Development – Asphalt Repairs/Replacement
2. Site Development – Additional Asphalt Parking Areas
3. Site Development – New Entrance Ramp & Associated Sidewalks
4. Selective Interior Demolition
5. Remove Stage
6. Foundation Repairs – (Lateral Displacement- West Wall) EXCLUDED
7. Provide vapor barrier/stone in crawl space (for moisture control)
8. Masonry Restoration – Point Existing Foundation CMU Walls
9. Wood & Timber Framing Repairs - (Displaced Wall- West Side & Auditorium Joists) EXCLUDED
10. Roof Sheathing Replacement EXCLUDED
11. Waterproofing of Basement Walls
12. Thermal Batt Insulation
13. Vinyl Soffit/Gutters/Downspouts
14. Vinyl Siding
15. Asphalt Shingle Replacement
16. Exterior Door & Window Replacement
17. Finish Unconditioned Porch
18. Acoustical Ceilings Replacement
19. Painting & Flooring Finishes
20. Wood Flooring (Auditorium) Leveling Repairs
21. ADA Signage & Compliant Hardware
22. Replace Entry Canopy System
23. Kitchen Equipment
24. Kitchen Hood & Ansul System
25. Asbestos Abatement
26. Mold Remediation EXCLUDED
27. Rodent Deterrent Systems
28. Fire Protection Systems (Completely New Service)
29. Plumbing Systems (Including Modifications to Restrooms for ADA Compliance)
30. Sanitary Drain Inspections/Cleaning EXCLUDED
31. HVAC Systems
32. Electrical Systems
33. Existing Lighting Level Verifications EXCLUDED
34. Fire Alarm Systems
35. Security Systems/Card Access

1491 West Liberty Street • Hubbard, Ohio 44425
Office (330) 759-8145 • Fax (330) 759-7275
desalvoinc@dccgc.com

INCORPORATED 1984 • AN EQUAL OPPORTUNITY EMPLOYER

DESALVO
CONSTRUCTION
COMMERCIAL / INDUSTRIAL

Total Probable Cost Summary: **$ 1,700,000.00**

Exclusions & Clarifications:

1. This probable cost summary is based on incurred construction costs on past similar projects and should be used for informational purposes only. The probable cost pricing reflected above anticipates construction costs in the year 2017. ***Actual construction costs for a project at this location will vary.***

2. This probable cost summary does not include any costs for the following:
   a. Architectural and/or Engineering Fees of Any Kind
   b. Building and/or Zoning Permits/Fees of Any Kind
   c. Reconfiguration of Interior Spaces (Except at Kitchen and Restrooms) of Any Kind
   d. Tap Fees of Any Kind
   e. Utility Fees of Any Kind
   f. Electrical Service Upgrades of Any Kind
   g. Natural Gas Distribution Work of Any Kind (The utility company will perform and bill owner directly)
   h. Costs for Weather Protection/Winter Operations of Any Kind

Thank you again for contacting DeSalvo Construction Company, Inc. in regards to probable cost information for the renovations of the existing community center.

Please do not hesitate to contact me to further assist with your construction needs as this project continues to develop.

Sincerely,

Joseph K. DeSalvo
President

JKD/jdb

1491 West Liberty Street • Hubbard, Ohio 44425
Office (330) 759-8145 • Fax (330) 759-7275
desalvoinc@dccgc.com

INCORPORATED 1984 • AN EQUAL OPPORTUNITY EMPLOYER

CHAPTER 1149
Zoning District Regulations

1149.01	**General regulations for all residential districts.**	**1149.07**	**C-1N, Neighborhood Commercial District.**
1149.02	**R-15, R-12 and R-8 Residential Districts.**	**1149.08**	**C-1, Central Business District.**
1149.03	**R-M Residential, Multi-Family District.**	**1149.09**	**C-2 Highway Commercial District.**
1149.04	**R-MHP, Residential Mobile Home Park District.**	**1149.10**	**S-1, Services District.**
1149.05	**O-D Office District.**	**1149.11**	**I-1 Industrial District.**
1149.06	**Reserved.**	**1149.12**	**District Development Standards.**

CROSS REFERENCES
Enforcement and penalty - see P. & Z. Ch. 1163

1149.01 GENERAL REGULATIONS FOR ALL RESIDENTIAL DISTRICTS.

(a) Connection to Water and Sewer Required. It shall be unlawful to construct or occupy any residential dwelling that is not connected to an approved water supply and sewerage disposal facility. Wherever public or community water and sewerage systems are available, dwelling shall be connected to such systems. In every other case, individual water supply and individual sewerage disposal facilities must meet the requirements set by the Trumbull County Health Department.

(b) Application of District Regulations.

(1) The following regulations pertain to the districts established by this ordinance. These regulations are supplemented and qualified by additional general regulations appearing in Chapter 1153 and the special regulations appearing in Chapter 1155. The regulations set by this ordinance within each district shall be minimum regulations and shall apply uniformly to each class or kind of structure or land, and particularly, except as hereinafter provided.

(2) No building, structure, or land shall hereafter be used or occupied, and no building or structure or part hereof shall hereafter be erected, constructed, reconstructed, moved or structurally altered except in conformity with all the regulations herein specified for the district in which it is located.

(3) No building or other structure shall hereafter be erected or altered:

A. To exceed the height or bulk;

B. To accommodate or house a greater number of families;

C. To occupy a greater percentage of lot area;

D. To have narrower or smaller rear yards, front yards, side yards, or other open spaces;

than herein required; or in any other manner contrary to the provisions of this ordinance.

(4) No part of a yard, or other open space, or off-street parking or loading space required about or in connection with any building for the purpose of complying with the ordinance, shall be included as part of a yard, open space, or off-street parking or loading space similarly required for any other building.

(5) No yard or lot existing at the time of passage of this ordinance shall be reduced in dimension or area below the minimum requirements set forth herein. Yards or lots created after the effective date of this ordinance shall meet at least the minimum requirements established by this ordinance.

(c) Newly Annexed Territory. When the City annexes new territory which was previously part of a township or county, and in which territory zoning regulations have been previously adopted as provided by Sections 303.03 to 303.25, inclusive, or Section 519.02 to 519.25, inclusive, to the Ohio Revised Code, such regulations as they pertain to the territory shall be adopted and continued by the City. Any amendment to these regulations shall be in conformity with the amendment procedure included in this ordinance.

(d) Uses. The uses permitted in each zoning classification are permitted only in the zone specified and shall not be permitted in a more or less restrictive zone.

1149.02 R-15, R-12 AND R-8 RESIDENTIAL DISTRICTS.

These residential districts are established as areas in which the principal use of land is for single-family dwellings and for related recreational, religious, and educational facilities normally required to provide an orderly and attractive residential area. The regulations for these districts are intended to discourage any use which, because of its characteristics, would interfere with the development of or be detrimental to the residential nature of the area included in the districts.

(a) Uses Permitted in R-15, R-12 and R-8 Residential Districts:

Single-family dwelling with garage.
Home occupation (subject to requirements in Section 1153.11).
A portable, temporary school classroom.
Sign identification (subject to provisions of Chapter 1151).
Sign occupancy (subject to provisions of Chapter 1151).
Sign, temporary (appertaining to the lease or sale of a building).
Sectional Homes with garage (R-15 and R-12)
Modular Homes with garage (R-8)
Temporary building, incidental to the construction of buildings permitted in these districts, and which shall be removed when the work is completed
Uses and structures customarily accessory to the permitted uses.

(b) Uses Permitted on Review: The following uses may be permitted on review by the Planning and Zoning Commission in accordance with the provisions of Chapter 1159.
Child care home
Church
Fire Station
Golf course, including clubhouse and other improvements
Library
Police Station
Private recreation area
Public park and playground
Public utility building and use
School, public, parochial, and private.
Transportation and utility easement and right-of-way
Other public and semi-public uses which are considered to be compatible with the aforementioned uses.

(c) Accessory Building Setback: Accessory buildings may be located in the rear yard provided they are set back not less than five (5) feet from any lot line and occupy not more than 20 percent of the rear yard.

(d) Off-Street Parking. Off-street parking shall be provided in accordance with the provisions set forth in Section 1153.09.

(e) Minimum Requirements – Residential Lots: See Section 1149.12.

(f) Minimum Requirements-Nonresidential Lots: See Section 1149.12.

(g) Height Limitation: See Section 1149.12.

(h) Single Lots or Adjacent Lots:

(1) No fences, garages, or storage sheds will be permitted on a lot that does not already have a primary structure on it (commercial building or residential structure).

(2) If a person owns adjacent lots and one lot has a primary structure on it, the other lot may have a garage built on it, but the two lots must first be combined into one lot.

1149.03 R-M RESIDENTIAL, MULTI-FAMILY DISTRICT.

This residential district is established to provide for medium and high population density. The principal use of land is for two-family and multiple-family dwellings, and the recreational, religious, and educational facilities normally required to provide an orderly and attractive residential area are included. The regulations for this district are intended to discourage any use which, because of its character, would interfere with the development of or be detrimental to the residential nature of the area included in the district.

(a) Uses Permitted:
Child care home.
Detached single-family dwelling with garage.
Dwelling, multi-family.
Dwelling, two-family with each unit having its own garage.
Home occupation (subject to requirements of Chapter 1153).
A portable temporary public, parochial, or private school classroom.
Sign, identification (subject to provisions of Chapter 1151)
Sign, occupancy (subject to provisions of Chapter 1151)
Sign, temporary (appertaining to the lease or sale of a building or premises)

Temporary building, incidental to the construction of buildings permitted in this district, and which shall be removed when work is completed.
Uses and structures customarily accessory to the permitted uses.

(b) Uses Permitted on Review: The following uses may be permitted on review by the Board of Adjustment in accordance with the provisions contained in Chapter 1159.
Child care center.
Church.
Fire station.
Golf course, including a clubhouse and other improvements.
Halfway house.
Library.
Police station.
Private park and/or playground.
School, public, parochial, and private.
Transportation and utility easement and right-of-way.
Other public and semi-public uses which are considered to be compatible with the aforementioned uses.

(c) Height Limitation: See Section 1149.12.

(d) Lot Area: See Section 1149.12.

(e) Dimensional Requirements: See Section 1149.12.

(f) Accessory Building Setback: Accessory buildings may be located in the rear yard; provided that they are set back not less than 5 feet from any lot line and occupy not more than 20 percent of the rear yard.

(g) Off Street Parking: Off-street parking shall be provided in accordance with the provisions set forth in Section 1153.09.

(h) Halfway House or Community Residential Treatment Center:

(1) In order to provide opportunity for location of Halfway Houses or Community Residential Treatment Centers, to avoid over concentration of such facilities and to establish the suitability of the requested use at the proposed location. Halfway Houses or Community Residential Treatment Centers require a Special Permit. No application for a Special Permit shall be accepted for review unless accompanied by sufficient documentation from the appropriate licensing or certifying agency determining the need for such a facility at the proposed location. The applicant is responsible for demonstrating compliance with this section.

(2) The Planning and Zoning Commission shall consider the following criteria in determining whether a location is appropriate for a Halfway House or a Community Residential Treatment Center and may attach conditions which it deems to be appropriate to such special permit and consistent with the purposes of this ordinance.

A. The Halfway House or Community Residential Treatment Center shall:

1. Be occupied by not more than thirty (30) residents, exclusive of staff, limited by the size of the existing or proposed building and its allocation of space for sleeping quarters, except that the Commission may approve a larger number solely for the reason that the proposal's economic feasibility is tied to such larger number of residents; and

CHAPTER 3

USE AND OCCUPANCY CLASSIFICATION

SECTION 301
GENERAL

301.1 Scope. The provisions of this chapter shall control the classification of all buildings and structures as to use and occupancy.

SECTION 302
CLASSIFICATION

302.1 General. Structures or portions of structures shall be classified with respect to occupancy in one or more of the groups listed below. A room or space that is intended to be occupied at different times for different purposes shall comply with all of the requirements that are applicable to each of the purposes for which the room or space will be occupied. Structures with multiple occupancies or uses shall comply with Section 508. Where a structure is proposed for a purpose that is not specifically provided for in this code, such structure shall be classified in the group that the occupancy most nearly resembles, according to the fire safety and relative hazard involved.

1. Assembly (see Section 303): Groups A-1, A-2, A-3, A-4 and A-5
2. Business (see Section 304): Group B
3. Educational (see Section 305): Group E
4. Factory and Industrial (see Section 306): Groups F-1 and F-2
5. High Hazard (see Section 307): Groups H-1, H-2, H-3, H-4 and H-5
6. Institutional (see Section 308): Groups I-1, I-2, I-3 and I-4
7. Mercantile (see Section 309): Group M
8. Residential (see Section 310): Groups R-1, R-2, R-3 and R-4
9. Storage (see Section 311): Groups S-1 and S-2
10. Utility and Miscellaneous (see Section 312): Group U

SECTION 303
ASSEMBLY GROUP A

303.1 Assembly Group A. Assembly Group A occupancy includes, among others, the use of a building or structure, or a portion thereof, for the gathering of persons for purposes such as civic, social or religious functions; recreation, food or drink consumption or awaiting transportation.

Exceptions:

1. A building or tenant space used for assembly purposes with an occupant load of less than 50 persons shall be classified as a Group B occupancy.
2. A room or space used for assembly purposes with an occupant load of less than 50 persons and accessory to another occupancy shall be classified as a Group B occupancy or as part of that occupancy.
3. A room or space used for assembly purposes that is less than 750 square feet (70 m^2) in area and accessory to another occupancy shall be classified as a Group B occupancy or as part of that occupancy.
4. Assembly areas that are accessory to Group E occupancies are not considered separate occupancies except when applying the assembly occupancy requirements of Chapter 11.
5. Accessory religious educational rooms and religious auditoriums with occupant loads of less than 100 are not considered separate occupancies.

Assembly occupancies shall include the following:

A-1 Assembly uses, usually with fixed seating, intended for the production and viewing of the performing arts or motion pictures including, but not limited to:

Motion picture theaters
Symphony and concert halls
Television and radio studios admitting an audience
Theaters

A-2 Assembly uses intended for food and/or drink consumption including, but not limited to:

Banquet halls
Night clubs
Restaurants
Taverns and bars

A-3 Assembly uses intended for worship, recreation or amusement and other assembly uses not classified elsewhere in Group A including, but not limited to:

Amusement arcades
Art galleries
Bowling alleys
Community halls
Courtrooms
Dance halls (not including food or drink consumption)
Exhibition halls
Funeral parlors
Gymnasiums (without spectator seating)
Indoor swimming pools (without spectator seating)
Indoor tennis courts (without spectator seating)
Lecture halls
Libraries
Museums
Places of religious worship
Pool and billiard parlors
Waiting areas in transportation terminals

TABLE 503
ALLOWABLE BUILDING HEIGHTS AND AREAS[a]

Building height limitations shown in feet above grade plane. Story limitations shown as stories above grade plane. Building area limitations shown in square feet, as determined by the definition of "Area, building," per story

		TYPE OF CONSTRUCTION								
		TYPE I		TYPE II		TYPE III		TYPE IV	TYPE V	
		A	B	A	B	A	B	HT	A	B
	HEIGHT (feet)	UL	160	65	55	65	55	65	50	40
GROUP		STORIES (S) AREA (A)								
A-1	S	UL	5	3	2	3	2	3	2	1
	A	UL	UL	15,500	8,500	14,000	8,500	15,000	11,500	5,500
A-2	S	UL	11	3	2	3	2	3	2	1
	A	UL	UL	15,500	9,500	14,000	9,500	15,000	11,500	6,000
A-3	S	UL	11	3	2	3	2	3	2	1
	A	UL	UL	15,500	9,500	14,000	9,500	15,000	11,500	6,000
A-4	S	UL	11	3	2	3	2	3	2	1
	A	UL	UL	15,500	9,500	14,000	9,500	15,000	11,500	6,000
A-5	S	UL	UL	UL	UL	UL	UL	UL	UL	UL
	A	UL	UL	UL	UL	UL	UL	UL	UL	UL
B	S	UL	11	5	3	5	3	5	3	2
	A	UL	UL	37,500	23,000	28,500	19,000	36,000	18,000	9,000
E	S	UL	5	3	2	3	2	3	1	1
	A	UL	UL	26,500	14,500	23,500	14,500	25,500	18,500	9,500
F-1	S	UL	11	4	2	3	2	4	2	1
	A	UL	UL	25,000	15,500	19,000	12,000	33,500	14,000	8,500
F-2	S	UL	11	5	3	4	3	5	3	2
	A	UL	UL	37,500	23,000	28,500	18,000	50,500	21,000	13,000
H-1	S	1	1	1	1	1	1	1	1	NP
	A	21,000	16,500	11,000	7,000	9,500	7,000	10,500	7,500	NP
H-2[d]	S	UL	3	2	1	2	1	2	1	1
	A	21,000	16,500	11,000	7,000	9,500	7,000	10,500	7,500	3,000
H-3[d]	S	UL	6	4	2	4	2	4	2	1
	A	UL	60,000	26,500	14,000	17,500	13,000	25,500	10,000	5,000
H-4	S	UL	7	5	3	5	3	5	3	2
	A	UL	UL	37,500	17,500	28,500	17,500	36,000	18,000	6,500
H-5	S	4	4	3	3	3	3	3	3	2
	A	UL	UL	37,500	23,000	28,500	19,000	36,000	18,000	9,000
I-1	S	UL	9	4	3	4	3	4	3	2
	A	UL	55,000	19,000	10,000	16,500	10,000	18,000	10,500	4,500
I-2	S	UL	4	2	1	1	NP	1	1	NP
	A	UL	UL	15,000	11,000	12,000	NP	12,000	9,500	NP
I-3	S	UL	4	2	1	2	1	2	2	1
	A	UL	UL	15,000	10,000	10,500	7,500	12,000	7,500	5,000
I-4	S	UL	5	3	2	3	2	3	1	1
	A	UL	60,500	26,500	13,000	23,500	13,000	25,500	18,500	9,000
M	S	UL	11	4	2	4	2	4	3	1
	A	UL	UL	21,500	12,500	18,500	12,500	20,500	14,000	9,000
R-1	S	UL	11	4	4	4	4	4	3	2
	A	UL	UL	24,000	16,000	24,000	16,000	20,500	12,000	7,000
R-2	S	UL	11	4	4	4	4	4	3	2
	A	UL	UL	24,000	16,000	24,000	16,000	20,500	12,000	7,000
R-3	S	UL	11	4	4	4	4	4	3	3
	A	UL	UL	UL	UL	UL	UL	UL	UL	UL
R-4	S	UL	11	4	4	4	4	4	3	2
	A	UL	UL	24,000	16,000	24,000	16,000	20,500	12,000	7,000
S-1	S	UL	11	4	2	3	2	4	3	1
	A	UL	48,000	26,000	17,500	26,000	17,500	25,500	14,000	9,000
S-2[b, c]	S	UL	11	5	3	4	3	5	4	2
	A	UL	79,000	39,000	26,000	39,000	26,000	38,500	21,000	13,500
U[c]	S	UL	5	4	2	3	2	4	2	1
	A	UL	35,500	19,000	8,500	14,000	8,500	18,000	9,000	5,500

For SI: 1 foot = 304.8 mm, 1 square foot = 0.0929 m^2.

A = building area per story, S = stories above grade plane, UL = Unlimited, NP = Not permitted.

a. See the following sections for general exceptions to Table 503:
   1. Section 504.2, Allowable building height and story increase due to automatic sprinkler system installation.
   2. Section 506.2, Allowable building area increase due to street frontage.
   3. Section 506.3, Allowable building area increase due to automatic sprinkler system installation.
   4. Section 507, Unlimited area buildings.

b. For open parking structures, see Section 406.3.

c. For private garages, see Section 406.1.

d. See Section 415.5 for limitations.

505.5.1 Area limitations. The aggregate area of all equipment platforms within a room shall not exceed two-thirds of the area of the room in which they are located. Where an equipment platform is located in the same room as a mezzanine, the area of the mezzanine shall be determined by Section 505.2 and the combined aggregate area of the equipment platforms and mezzanines shall not exceed two-thirds of the room in which they are located.

505.5.2 Fire suppression. Where located in a building that is required to be protected by an automatic sprinkler system, equipment platforms shall be fully protected by sprinklers above and below the platform, where required by the standards referenced in Section 903.3.

505.5.3 Guards. Equipment platforms shall have guards where required by Section 1013.1.

SECTION 506
BUILDING AREA MODIFICATIONS

506.1 General. The building areas limited by Table 503 shall be permitted to be increased due to frontage *(I_f)* and automatic sprinkler system protection *(I_s)* in accordance with the following:

$$A_a = \{A_t + [A_t \times I_f] + [A_t \times I_s]\} \qquad \textbf{(Equation 5-1)}$$

where:

A_a = Allowable building area per story (square feet).

A_t = Tabular building area per story in accordance with Table 503 (square feet).

I_f = Area increase factor due to frontage as calculated in accordance with Section 506.2.

I_s = Area increase factor due to sprinkler protection as calculated in accordance with Section 506.3.

506.2 Frontage increase. Every building shall adjoin or have access to a public way to receive a building area increase for frontage. Where a building has more than 25 percent of its perimeter on a public way or open space having a minimum width of 20 feet (6096 mm), the frontage increase shall be determined in accordance with the following:

$$I_f = [F / P - 0.25]W / 30 \qquad \textbf{(Equation 5-2)}$$

where:

I_f = Area increase due to frontage.

F = Building perimeter that fronts on a public way or open space having 20 feet (6096 mm) open minimum width (feet).

P = Perimeter of entire building (feet).

W = Width of public way or open space (feet) in accordance with Section 506.2.1.

506.2.1 Width limits. The value of W shall be at least 20 feet (6096 mm). Where the value of W varies along the perimeter of the building, the calculation performed in accordance with Equation 5-2 shall be based on the weighted average of each portion of exterior wall and open space where the value of W is greater than or equal to 20 feet (6096 mm). Where the value of W exceeds 30 feet (9144 mm), a value of 30 feet (9144 mm) shall be used in calculating the weighted average, regardless of the actual width of the open space. Where two or more buildings are on the same lot, W shall be measured from the exterior face of a building to the exterior face of an opposing building, as applicable.

Exception: The value of W divided by 30 shall be permitted to be a maximum of 2 when the building meets all requirements of Section 507 except for compliance with the 60-foot (18 288 mm) public way or yard requirement, as applicable.

506.2.2 Open space limits. Such open space shall be either on the same lot or dedicated for public use and shall be accessed from a street or *approved fire lane. A fire lane shall have an unobstructed width of not less than 20 feet (6096 mm), except for approved security gates, and an unobstructed vertical clearance of not less than 13 feet 6 inches (4115 mm).*

Exception: *An unoccupied space on an adjoining property may be included, provided that the adjoining property is dedicated or deeded so as to preclude, for the life of the structure, the erection of any building or structure on such space (see Section 3781.02 of the Revised Code).*

506.3 Automatic sprinkler system increase. Where a building is equipped throughout with an approved automatic sprinkler system in accordance with Section 903.3.1.1, the building area limitation in Table 503 is permitted to be increased by an additional 200 percent ($I_s = 2$) for buildings with more than one story above grade plane and an additional 300 percent ($I_s = 3$) for buildings with no more than one story above grade plane. These increases are permitted in addition to the height and story increases in accordance with Section 504.2.

Exception: The building area limitation increases shall not be permitted for the following conditions:

1. The automatic sprinkler system increase shall not apply to buildings with an occupancy in Group H-1.
2. The automatic sprinkler system increase shall not apply to the building area of an occupancy in Group H-2 or H-3. For buildings containing such occupancies, the allowable building area shall be determined in accordance with Section 508.4.2, with the sprinkler system increase applicable only to the portions of the building not classified as Group H-2 or H-3.
3. Fire-resistance rating substitution in accordance with Table 601, Note d.

506.4 Single occupancy buildings with more than one story. The total allowable building area of a single occupancy building with more than one story above grade plane shall be determined in accordance with this section. The actual aggregate building area at all stories in the building shall not exceed the total allowable building area.

Exception: A single basement need not be included in the total allowable building area, provided such basement does not exceed the area permitted for a building with no more than one story above grade plane.

CHAPTER 6

TYPES OF CONSTRUCTION

SECTION 601
GENERAL

601.1 Scope. The provisions of this chapter shall control the classification of buildings as to type of construction.

SECTION 602
CONSTRUCTION CLASSIFICATION

602.1 General. Buildings and structures erected or to be erected, altered or extended in height or area shall be classified in one of the five construction types defined in Sections 602.2 through 602.5. The building elements shall have a fire-resistance rating not less than that specified in Table 601 and exterior walls shall have a fire-resistance rating not less than that specified in Table 602. Where required to have a fire-resistance rating by Table 601, building elements shall comply with the applicable provisions of Section 703.2. The protection of openings, ducts and air transfer openings in building elements shall not be required unless required by other provisions of this code.

602.1.1 Minimum requirements. A building or portion thereof shall not be required to conform to the details of a type of construction higher than that type which meets the minimum requirements based on occupancy even though certain features of such a building actually conform to a higher type of construction.

602.2 Types I and II. Types I and II construction are those types of construction in which the building elements listed in Table 601 are of noncombustible materials, except as permitted in Section 603 and elsewhere in this code.

602.3 Type III. Type III construction is that type of construction in which the exterior walls are of noncombustible materials and the interior building elements are of any material permitted by this code. Fire-retardant-treated wood framing complying with Section 2303.2 shall be permitted within exterior wall assemblies of a 2-hour rating or less.

602.4 Type IV. Type IV construction (Heavy Timber, HT) is that type of construction in which the exterior walls are of noncombustible materials and the interior building elements are of solid or laminated wood without concealed spaces. The details of Type IV construction shall comply with the provisions of this section. Fire-retardant-treated wood framing complying with Section 2303.2 shall be permitted within exterior wall assemblies with a 2-hour rating or less. Minimum solid

TABLE 601
FIRE-RESISTANCE RATING REQUIREMENTS FOR BUILDING ELEMENTS (hours)

BUILDING ELEMENT	TYPE I		TYPE II		TYPE III		TYPE IV	TYPE V	
	A	B	A[d]	B	A[d]	B	HT	A[d]	B
Primary structural frame[g] (see Section 202)	3[a]	2[a]	1	0	1	0	HT	1	0
Bearing walls									
Exterior[f, g]	3	2	1	0	2	2	2	1	0
Interior	3[a]	2[a]	1	0	1	0	1/HT	1	0
Nonbearing walls and partitions Exterior	See Table 602								
Nonbearing walls and partitions Interior[e]	0	0	0	0	0	0	See Section 602.4.6	0	0
Floor construction and secondary members (see Section 202)	2	2	1	0	1	0	HT	1	0
Roof construction and secondary members (see Section 202)	$1^1/_2$[b]	1[b, c]	1[b, c]	0[c]	1[b, c]	0	HT	1[b, c]	0

For SI: 1 foot = 304.8 mm.

a. Roof supports: Fire-resistance ratings of primary structural frame and bearing walls are permitted to be reduced by 1 hour where supporting a roof only.

b. Except in Group F-1, H, M and S-1 occupancies, fire protection of structural members shall not be required, including protection of roof framing and decking where every part of the roof construction is 20 feet or more above any floor immediately below. Fire-retardant-treated wood members shall be allowed to be used for such unprotected members.

c. In all occupancies, heavy timber shall be allowed where a 1-hour or less fire-resistance rating is required.

d. An approved automatic sprinkler system in accordance with Section 903.3.1.1 shall be allowed to be substituted for 1-hour fire-resistance-rated construction, provided such system is not otherwise required by other provisions of the code or used for an allowable area increase in accordance with Section 506.3 or an allowable height increase in accordance with Section 504.2. The 1-hour substitution for the fire resistance of exterior walls shall not be permitted.

e. Not less than the fire-resistance rating required by other sections of this code.

f. Not less than the fire-resistance rating based on fire separation distance (see Table 602).

g. Not less than the fire-resistance rating as referenced in Section 704.10

out fixed seating, the occupant load shall not be less than that number determined by dividing the floor area under consideration by the occupant per unit of area factor assigned to the occupancy as set forth in Table 1004.1.1. Where an intended use is not listed in Table 1004.1.1, the building official shall establish a use based on a listed use that most nearly resembles the intended use.

Exception: Where approved by the building official, the actual number of occupants for whom each occupied space, floor or building is designed, although less than those determined by calculation, shall be permitted to be used in the determination of the design occupant load.

1004.2 Increased occupant load. The occupant load permitted in any building, or portion thereof, is permitted to be increased from that number established for the occupancies in Table 1004.1.1, provided that all other requirements of the code are also met based on such modified number and the occupant load does not exceed one occupant per 7 square feet (0.65 m^2) of occupiable floor space. Where required by the building official, an approved aisle, seating or fixed equipment diagram substantiating any increase in occupant load shall be submitted. Where required by the building official, such diagram shall be posted.

1004.3 Posting of occupant load. Every room or space that is an assembly occupancy shall have the occupant load of the room or space posted in a conspicuous place, near the main exit or exit access doorway from the room or space. Posted signs shall be of an approved legible permanent design and shall be maintained by the owner or authorized agent.

1004.4 Exiting from multiple levels. Where exits serve more than one floor, only the occupant load of each floor considered individually shall be used in computing the required capacity of the exits at that floor, provided that the exit capacity shall not decrease in the direction of egress travel.

1004.5 Egress convergence. Where means of egress from floors above and below converge at an intermediate level, the capacity of the means of egress from the point of convergence shall not be less than the sum of the two floors.

1004.6 Mezzanine levels. The occupant load of a mezzanine level with egress onto a room or area below shall be added to that room or area's occupant load, and the capacity of the exits shall be designed for the total occupant load thus established.

1004.7 Fixed seating. For areas having fixed seats and aisles, the occupant load shall be determined by the number of fixed seats installed therein. The occupant load for areas in which fixed seating is not installed, such as waiting spaces and wheelchair spaces, shall be determined in accordance with Section 1004.1.1 and added to the number of fixed seats.

For areas having fixed seating without dividing arms, the occupant load shall not be less than the number of seats based on one person for each 18 inches (457 mm) of seating length.

The occupant load of seating booths shall be based on one person for each 24 inches (610 mm) of booth seat length measured at the backrest of the seating booth.

1004.8 Outdoor areas. Yards, patios, courts and similar outdoor areas accessible to and usable by the building occupants shall be provided with means of egress as required by this chap-

TABLE 1004.1.1
MAXIMUM FLOOR AREA ALLOWANCES PER OCCUPANT

FUNCTION OF SPACE	FLOOR AREA IN SQ. FT. PER OCCUPANT
Accessory storage areas, mechanical equipment room	300 gross
Agricultural building	300 gross
Aircraft hangars	500 gross
Airport terminal	
Baggage claim	20 gross
Baggage handling	300 gross
Concourse	100 gross
Waiting areas	15 gross
Assembly	
Gaming floors (keno, slots, etc.)	11 gross
Assembly with fixed seats	See Section 1004.7
Assembly without fixed seats	
Concentrated (chairs only—not fixed)	7 net
Standing space	5 net
Unconcentrated (tables and chairs)	15 net
Bowling centers, allow 5 persons for each lane including 15 feet of runway, and for additional areas	7 net
Business areas	100 gross
Courtrooms—other than fixed seating areas	40 net
Day care	35 net
Dormitories	50 gross
Educational	
Classroom area	20 net
Shops and other vocational room areas	50 net
Exercise rooms	50 gross
H-5 Fabrication and manufacturing areas	200 gross
Industrial areas	100 gross
Institutional areas	
Inpatient treatment areas	240 gross
Outpatient areas	100 gross
Sleeping areas	120 gross
Kitchens, commercial	200 gross
Library	
Reading rooms	50 net
Stack area	100 gross
Locker rooms	50 gross
Mercantile	
Areas on other floors	60 gross
Basement and grade floor areas	30 gross
Storage, stock, shipping areas	300 gross
Parking garages	200 gross
Residential	200 gross
Skating rinks, swimming pools	
Rink and pool	50 gross
Decks	15 gross
Stages and platforms	15 net
Warehouses	500 gross

For SI: 1 square foot = 0.0929 m^2.

ter. The occupant load of such outdoor areas shall be assigned by the building official in accordance with the anticipated use. Where outdoor areas are to be used by persons in addition to the occupants of the building, and the path of egress travel from the outdoor areas passes through the building, means of egress requirements for the building shall be based on the sum of the occupant loads of the building plus the outdoor areas.

Exceptions:

1. Outdoor areas used exclusively for service of the building need only have one means of egress.
2. Outdoor areas *dedicated to individual dwelling units in* Group R-3 and Group R-2.

1004.9 Multiple occupancies. Where a building contains two or more occupancies, the means of egress requirements shall apply to each portion of the building based on the occupancy of that space. Where two or more occupancies utilize portions of the same means of egress system, those egress components shall meet the more stringent requirements of all occupancies that are served.

SECTION 1005
EGRESS WIDTH

1005.1 Minimum required egress width. The means of egress width shall not be less than required by this section. The total width of means of egress in inches (mm) shall not be less than the total occupant load served by the means of egress multiplied by 0.3 inch (7.62 mm) per occupant for stairways and by 0.2 inch (5.08 mm) per occupant for other egress components. The width shall not be less than specified elsewhere in this code. Multiple means of egress shall be sized such that the loss of any one means of egress shall not reduce the available capacity to less than 50 percent of the required capacity. The maximum capacity required from any story of a building shall be maintained to the termination of the means of egress.

Exception: Means of egress complying with Section 1028.

1005.2 Door encroachment. Doors, when fully opened, and handrails shall not reduce the required means of egress width by more than 7 inches (178 mm). Doors in any position shall not reduce the required width by more than one-half. Other nonstructural projections such as trim and similar decorative features shall be permitted to project into the required width a maximum of $1^1/_2$ inches (38 mm) on each side.

Exception: The restrictions on a door swing shall not apply to doors within individual dwelling units and sleeping units of Group R-2 and dwelling units of Group R-3.

1005.3 Door hardware encroachment. Surface-mounted latch release hardware shall be exempt from inclusion in the 7-inch (178 mm) maximum projection requirement of Section 1005.2 when:

1. The hardware is mounted to the side of the door facing the corridor width when the door is in the open position; and
2. The hardware is mounted not less than 34 inches (865 mm) or more than 48 inches (1220 mm) above the finished floor.

SECTION 1006
MEANS OF EGRESS ILLUMINATION

1006.1 Illumination required. The means of egress, including the exit discharge, shall be illuminated at all times the building space served by the means of egress is occupied.

Exceptions:

1. Occupancies in Group U.
2. Aisle accessways in Group A.
3. Dwelling units and sleeping units in Groups R-1, R-2 and R-3.
4. Sleeping units of Group I occupancies.

1006.2 Illumination level. The means of egress illumination level shall not be less than 1 footcandle (11 lux) at the walking surface.

Exception: For auditoriums, theaters, concert or opera halls and similar assembly occupancies, the illumination at the walking surface is permitted to be reduced during performances to not less than 0.2 footcandle (2.15 lux), provided that the required illumination is automatically restored upon activation of a premises' fire alarm system where such system is provided.

1006.3 Illumination emergency power. The power supply for means of egress illumination shall normally be provided by the premises' electrical supply.

In the event of power supply failure, an emergency electrical system shall automatically illuminate all of the following areas:

1. Aisles and unenclosed egress stairways in rooms and spaces that require two or more means of egress.
2. Corridors, exit enclosures and exit passageways in buildings required to have two or more exits.
3. Exterior egress components at other than their levels of exit discharge until exit discharge is accomplished for buildings required to have two or more exits.
4. Interior exit discharge elements, as permitted in Section 1027.1, in buildings required to have two or more exits.
5. Exterior landings as required by Section 1008.1.6 for exit discharge doorways in buildings required to have two or more exits.

The emergency power system shall provide power for a duration of not less than 90 minutes and shall consist of storage batteries, unit equipment or an on-site generator. The installation of the emergency power system shall be in accordance with Chapter 27.

1006.4 Performance of system. Emergency lighting facilities shall be arranged to provide initial illumination that is at least an average of 1 footcandle (11 lux) and a minimum at any point of 0.1 footcandle (1 lux) measured along the path of egress at floor level. Illumination levels shall be permitted to decline to 0.6 footcandle (6 lux) average and a minimum at any point of 0.06 footcandle (0.6 lux) at the end of the emergency lighting time duration. A maximum-to-minimum illumination uniformity ratio of 40 to 1 shall not be exceeded.

1015.6 Stage means of egress. Where two means of egress are required, based on the stage size or occupant load, one means of egress shall be provided on each side of the stage.

1015.6.1 Gallery, gridiron and catwalk means of egress. The means of egress from lighting and access catwalks, galleries and gridirons shall meet the requirements for occupancies in Group F-2.

Exceptions:

1. A minimum width of 22 inches (559 mm) is permitted for lighting and access catwalks.
2. Spiral stairs are permitted in the means of egress.
3. Stairways required by this subsection need not be enclosed.
4. Stairways with a minimum width of 22 inches (559 mm), ladders or spiral stairs are permitted in the means of egress.
5. A second means of egress is not required from these areas where a means of escape to a floor or to a roof is provided. Ladders, alternating tread devices or spiral stairs are permitted in the means of escape.
6. Ladders are permitted in the means of egress.

SECTION 1016
EXIT ACCESS TRAVEL DISTANCE

1016.1 Travel distance limitations. Exits shall be so located on each story such that the maximum length of exit access travel, measured from the most remote point within a story along the natural and unobstructed path of egress travel to an exterior exit door at the level of exit discharge, an entrance to a vertical exit enclosure, an exit passageway, a horizontal exit, an exterior exit stairway or an exterior exit ramp, shall not exceed the distances given in Table 1016.1.

Exceptions:

1. Travel distance in open parking garages is permitted to be measured to the closest riser of open exit stairways.
2. In outdoor facilities with open exit access components and open exterior exit stairways or exit ramps, travel distance is permitted to be measured to the closest riser of an exit stairway or the closest slope of the exit ramp.
3. In other than occupancy Groups H and I, the exit access travel distance to a maximum of 50 percent of the exits is permitted to be measured from the most remote point within a building to an exit using unenclosed exit access stairways or ramps when connecting a maximum of two stories. The two connected stories shall be provided with at least two means of egress. Such interconnected stories shall not be open to other stories.
4. In other than occupancy Groups H and I, exit access travel distance is permitted to be measured from the most remote point within a building to an exit using unenclosed exit access stairways or ramps in the first and second stories above grade plane in buildings equipped throughout with an automatic sprinkler system in accordance with Section 903.3.1.1. The first and second stories above grade plane shall be provided with at least two means of egress. Such interconnected stories shall not be open to other stories.

Where applicable, travel distance on unenclosed exit access stairways or ramps and on connecting stories shall also be included in the travel distance measurement. The measurement along stairways shall be made on a plane parallel and tangent to the stair tread nosings in the center of the stairway.

1016.2 Exterior egress balcony increase. Travel distances specified in Section 1016.1 shall be increased up to an additional 100 feet (30 480 mm) provided the last portion of the exit access leading to the exit occurs on an exterior egress balcony constructed in accordance with Section 1019. The length of such balcony shall not be less than the amount of the increase taken.

TABLE 1016.1
EXIT ACCESS TRAVEL DISTANCE[a]

OCCUPANCY	WITHOUT SPRINKLER SYSTEM (feet)	WITH SPRINKLER SYSTEM (feet)
A, E, F-1, M, R, S-1	200	250[b]
I-1	Not Permitted	250[c]
B	200	300[c]
F-2, S-2, U	300	400[c]
H-1	Not Permitted	75[c]
H-2	Not Permitted	100[c]
H-3	Not Permitted	150[c]
H-4	Not Permitted	175[c]
H-5	Not Permitted	200[c]
I-2, I-3, I-4	Not Permitted	200[c]

For SI: 1 foot = 304.8 mm.

a. See the following sections for modifications to exit access travel distance requirements:
Section 402.4: For the distance limitation in malls.
Section 404.9: For the distance limitation through an atrium space.
Section 407.4: For the distance limitation in Group I-2.
Sections 408.6.1 and 408.8.1: For the distance limitations in Group I-3.
Section 411.4: For the distance limitation in special amusement buildings.
Section 1014.2.2: For the distance limitation in Group I-2 hospital suites.
Section 1015.4: For the distance limitation in refrigeration machinery rooms.
Section 1015.5: For the distance limitation in refrigerated rooms and spaces.
Section 1016.3: For increased limitation in Groups F-1 and S-1.
Section 1021.2: For buildings with one exit.
Section 1028.7: For increased limitation in assembly seating.
Section 1028.7: For increased limitation for assembly open-air seating.
Section 3103.4: For temporary structures.
Section 3104.9: For pedestrian walkways.

b. Buildings equipped throughout with an automatic sprinkler system in accordance with Section 903.3.1.1 or 903.3.1.2. See Section 903 for occupancies where automatic sprinkler systems are permitted in accordance with Section 903.3.1.2.

c. Buildings equipped throughout with an automatic sprinkler system in accordance with Section 903.3.1.1.

TABLE 1018.1
CORRIDOR FIRE-RESISTANCE RATING

OCCUPANCY	OCCUPANT LOAD SERVED BY CORRIDOR	REQUIRED FIRE-RESISTANCE RATING (hours)	
		Without sprinkler system	With sprinkler system[c]
H-1, H-2, H-3	All	Not Permitted	1
H-4, H-5	Greater than 30	Not Permitted	1
A, B, E, F, M, S, U	Greater than 30	1	0
R	Greater than 10	Not Permitted[d]	0.5
I-2[a], I-4	All	Not Permitted	0
I-1, I-3	All	Not Permitted	1[b]

a. For requirements for occupancies in Group I-2, see Sections 407.2 and 407.3.
b. For a reduction in the fire-resistance rating for occupancies in Group I-3, see Section 408.8.
c. Buildings equipped throughout with an automatic sprinkler system in accordance with Section 903.3.1.1 or 903.3.1.2 where allowed.
d. One hour when design qualifies in accordance with Section 903.2.8, Exception 3.

1018.2 Corridor width. The minimum corridor width shall be as determined in Section 1005.1, but not less than 44 inches (1118 mm).

Exceptions:

1. Twenty-four inches (610 mm)—For access to and utilization of electrical, mechanical or plumbing systems or equipment.
2. Thirty-six inches (914 mm)—With a required occupant capacity of less than 50.
3. Thirty-six inches (914 mm)—Within a dwelling unit.
4. Seventy-two inches (1829 mm)—In Group E with a corridor having a required capacity of 100 or more.
5. Seventy-two inches (1829 mm)—In corridors and areas serving gurney traffic in occupancies where patients receive outpatient medical care, which causes the patient to be not capable of self-preservation.
6. Ninety-six inches (2438 mm)—In Group I-2 in areas where required for bed movement.

1018.3 Corridor obstruction. The required width of corridors shall be unobstructed.

Exception: Doors complying with Section 1005.2.

1018.4 Dead ends. Where more than one exit or exit access doorway is required, the exit access shall be arranged such that there are no dead ends in corridors more than 20 feet (6096 mm) in length.

Exceptions:

1. In occupancies in Group I-3 of Occupancy Condition 2, 3 or 4 (see Section 308.4), the dead end in a corridor shall not exceed 50 feet (15 240 mm).
2. In occupancies in Groups B, E, F, I-1, M, R-1, R-2, R-4, S and U, where the building is equipped throughout with an automatic sprinkler system in accordance with Section 903.3.1.1, the length of the dead-end corridors shall not exceed 50 feet (15 240 mm).
3. A dead-end corridor shall not be limited in length where the length of the dead-end corridor is less than 2.5 times the least width of the dead-end corridor.

1018.5 Air movement in corridors. Corridors shall not serve as supply, return, exhaust, relief or ventilation air ducts.

Exceptions:

1. Use of a corridor as a source of makeup air for exhaust systems in rooms that open directly onto such corridors, including toilet rooms, bathrooms, dressing rooms, smoking lounges and janitor closets, shall be permitted, provided that each such corridor is directly supplied with outdoor air at a rate greater than the rate of makeup air taken from the corridor.
2. Where located within a dwelling unit, the use of corridors for conveying return air shall not be prohibited.
3. Where located within tenant spaces of 1,000 square feet (93 m2) or less in area, utilization of corridors for conveying return air is permitted.
4. Incidental air movement from pressurized rooms within health care facilities, provided that the corridor is not the primary source of supply or return to the room.

1018.5.1 Corridor ceiling. Use of the space between the *corridor* ceiling and the floor or roof structure above as a return air plenum is permitted for one or more of the following conditions:

1. The corridor is not required to be of fire-resistance-rated construction;
2. The corridor is separated from the plenum by fire-resistance-rated construction;
3. The air-handling system serving the corridor is shut down upon activation of the air-handling unit smoke detectors required by the *International Mechanical Code*;
4. The air-handling system serving the corridor is shut down upon detection of sprinkler waterflow where the building is equipped throughout with an automatic sprinkler system; or

CHAPTER 29
PLUMBING SYSTEMS

SECTION 2901
GENERAL

2901.1 Scope. The provisions of this chapter and the *plumbing code* shall govern the erection, installation, alteration, repairs, relocation, replacement, addition to, use or maintenance of plumbing equipment and systems. Plumbing systems and equipment shall be constructed, installed and maintained in accordance with the *plumbing code*.

SECTION 2902
MINIMUM PLUMBING FACILITIES

2902.1 Minimum number of fixtures. Plumbing fixtures shall be provided for the type of occupancy and in the minimum number shown in Table 2902.1. Types of occupancies not shown in Table 2902.1 shall be considered individually by the building official. The number of occupants shall be determined by this code. Occupancy classification shall be determined in accordance with Chapter 3. *When the actual occupant load will be significantly different than that determined by Section 1004 of the building code, the building official may establish an alternate basis for determining the occupant load. This alternate basis shall be included in the special stipulations and conditions section of the certificate of occupancy issued for that structure pursuant to Section 110. For accessibility requirements, see "Chapter 11, Accessibility" of this code.*

Exception: *Facilities are not required in buildings less than 100 square feet in area if fixtures are available within 500 feet of the building.*

TABLE 2902.1
MINIMUM NUMBER OF REQUIRED PLUMBING FIXTURES[a]
(See Sections 2902.2 and 2902.3)

No.	CLASSIFICATION	OCCUPANCY	DESCRIPTION	WATER CLOSETS (URINALS)[h]		LAVATORIES		BATHTUBS/ SHOWERS	DRINKING FOUNTAINS[e,f] (SEE SECTION 410.1 OF THE *PLUMBING CODE*)	OTHER
				MALE	FEMALE	MALE	FEMALE			
1	Assembly	A-1[d]	Theaters and other buildings for the performing arts and motion pictures	1 per 125	1 per 65	1 per 200		—	1 per 500	1 service sink
		A-2[d]	Nightclubs, bars, taverns, dance halls and buildings for similar purposes	1 per 40	1 per 40	1 per 75		—	1 per 500	1 service sink
			Restaurants, banquet halls and food courts	1 per 75	1 per 75	1 per 200		—	1 per 500	1 service sink
		A-3[d]	Auditoriums without permanent seating, art galleries, exhibition halls, museums, lecture halls, libraries, arcades and gymnasiums	1 per 125	1 per 65	1 per 200		—	1 per 500	1 service sink
			Passenger terminals and transportation facilities	1 per 500	1 per 500	1 per 750		—	1 per 1,000	1 service sink
			Places of worship and other religious services	1 per 150	1 per 75	1 per 200		—	1 per 1,000	1 service sink
		A-4	Coliseums, arenas, skating rinks, pools and tennis courts for indoor sporting events and activities	1 per 75 for the first 1,500 and 1 per 120 for the remainder exceeding 1,500	1 per 40 for the first 1,520 and 1 per 60 for the remainder exceeding 1,520	1 per 200	1 per 150	—	1 per 1,000	1 service sink
		A-5	Stadiums, amusement parks, bleachers and grandstands for outdoor sporting events and activities	1 per 75 for the first 1,500 and 1 per 120 for the remainder exceeding 1,500	1 per 40 for the first 1,520 and 1 per 60 for the remainder exceeding 1,520	1 per 200	1 per 150	—	1 per 1,000	1 service sink

(continued)

3.3.166 Major Tenant. A tenant space, in a mall building, with one or more main entrances from the exterior that also serve as exits and are independent of the mall.

3.3.167 Mall. A roofed or covered common pedestrian area within a mall building that serves as access for two or more tenants and does not exceed three levels that are open to each other.

3.3.168 Mall Building. See 3.3.36.9.

3.3.169 Material.

3.3.169.1 *Combustible (Material).* A material that, in the form in which it is used and under the conditions anticipated, will ignite and burn; a material that does not meet the definition of noncombustible or limited-combustible.

3.3.169.2 *Limited-Combustible (Material).* See 4.6.14.

3.3.169.3 *Metal Composite Material (MCM).* A factory-manufactured panel consisting of metal skins bonded to both faces of a core made of any plastic other than foamed plastic insulation as defined in 3.3.150.1.

3.3.169.4 *Noncombustible (Material).* See 4.6.13.

3.3.169.5 *Weathered-Membrane Material.* Membrane material that has been subjected to a minimum of 3000 hours in a weatherometer in accordance with ASTM G 155, *Standard Practice for Operating Xenon Arc Light Apparatus for Exposure of Non-Metallic Materials*, or approved equivalent.

3.3.170* Means of Egress. A continuous and unobstructed way of travel from any point in a building or structure to a public way consisting of three separate and distinct parts: (1) the exit access, (2) the exit, and (3) the exit discharge.

3.3.170.1 *Accessible Means of Egress.* A means of egress that provides an accessible route to an area of refuge, a horizontal exit, or a public way.

3.3.171 Means of Escape. A way out of a building or structure that does not conform to the strict definition of means of egress but does provide an alternate way out.

3.3.172* Membrane. A thin layer of construction material.

3.3.173 Membrane Structure. See 3.3.271.4.

3.3.174 Mercantile Occupancy. See 3.3.188.9.

3.3.175 Metal Composite Material (MCM). See 3.3.169.3.

3.3.176 Mezzanine. An intermediate level between the floor and the ceiling of any room or space.

3.3.177 Mixed Occupancy. See 3.3.188.10.

3.3.178* Modification. The reconfiguration of any space; the addition or elimination of any door or window; the addition or elimination of load-bearing elements; the reconfiguration or extension of any system; or the installation of any additional equipment.

3.3.179 Multilevel Play Structure. See 3.3.271.5.

3.3.180 Multiple Occupancy. See 3.3.188.11.

3.3.181 Multiple Station Alarm Device. See 3.3.61.1.

3.3.182 Multipurpose Assembly Occupancy. See 3.3.188.2.1.

3.3.183 Net Floor Area. See 3.3.21.2.2.

3.3.184 Non-Patient-Care Suite (Health Care Occupancies). See 3.3.272.2.

3.3.185 Normally Unoccupied Building Service Equipment Support Area. See 3.3.21.6.

3.3.186 Nursing Home. See 3.3.140.2.

3.3.187* Objective. A requirement that needs to be met to achieve a goal.

3.3.188 Occupancy. The purpose for which a building or other structure, or part thereof, is used or intended to be used. **[ASCE/SEI 7:1.2]**

3.3.188.1* *Ambulatory Health Care Occupancy.* An occupancy used to provide services or treatment simultaneously to four or more patients that provides, on an outpatient basis, one or more of the following: (1) treatment for patients that renders the patients incapable of taking action for self-preservation under emergency conditions without the assistance of others; (2) anesthesia that renders the patients incapable of taking action for self-preservation under emergency conditions without the assistance of others; (3) emergency or urgent care for patients who, due to the nature of their injury or illness, are incapable of taking action for self-preservation under emergency conditions without the assistance of others.

3.3.188.2* *Assembly Occupancy.* An occupancy (1) used for a gathering of 50 or more persons for deliberation, worship, entertainment, eating, drinking, amusement, awaiting transportation, or similar uses; or (2) used as a special amusement building, regardless of occupant load.

3.3.188.2.1 *Multipurpose Assembly Occupancy.* An assembly room designed to accommodate temporarily any of several possible assembly uses.

3.3.188.3* *Business Occupancy.* An occupancy used for the transaction of business other than mercantile.

3.3.188.4* *Day-Care Occupancy.* An occupancy in which four or more clients receive care, maintenance, and supervision, by other than their relatives or legal guardians, for less than 24 hours per day.

3.3.188.5* *Detention and Correctional Occupancy.* An occupancy used to house one or more persons under varied degrees of restraint or security where such occupants are mostly incapable of self-preservation because of security measures not under the occupants' control.

3.3.188.6* *Educational Occupancy.* An occupancy used for educational purposes through the twelfth grade by six or more persons for 4 or more hours per day or more than 12 hours per week.

3.3.188.7* *Health Care Occupancy.* An occupancy used to provide medical or other treatment or care simultaneously to four or more patients on an inpatient basis, where such patients are mostly incapable of self-preservation due to age, physical or mental disability, or because of security measures not under the occupants' control.

3.3.188.8* *Industrial Occupancy.* An occupancy in which products are manufactured or in which processing, assembling, mixing, packaging, finishing, decorating, or repair operations are conducted.

3.3.188.8.1* *General Industrial Occupancy.* An industrial occupancy in which ordinary and low hazard industrial operations are conducted in buildings of conventional design suitable for various types of industrial processes.

Table 7.3.1.2 Occupant Load Factor

Use	(ft^2/person)[a]	(m^2/person)[a]
Assembly Use		
Concentrated use, without fixed seating	7 net	0.65 net
Less concentrated use, without fixed seating	15 net	1.4 net
Bench-type seating	1 person/ 18 linear in.	1 person/ 455 linear mm
Fixed seating	Use number of fixed seats	Use number of fixed seats
Waiting spaces	See 12.1.7.2 and 13.1.7.2.	See 12.1.7.2 and 13.1.7.2.
Kitchens	100	9.3
Library stack areas	100	9.3
Library reading rooms	50 net	4.6 net
Swimming pools	50 (water surface)	4.6 (water surface)
Swimming pool decks	30	2.8
Exercise rooms with equipment	50	4.6
Exercise rooms without equipment	15	1.4
Stages	15 net	1.4 net
Lighting and access catwalks, galleries, gridirons	100 net	9.3 net
Casinos and similar gaming areas	11	1
Skating rinks	50	4.6
Educational Use		
Classrooms	20 net	1.9 net
Shops, laboratories, vocational rooms	50 net	4.6 net
Day-Care Use	35 net	3.3 net
Health Care Use		
Inpatient treatment departments	240	22.3
Sleeping departments	120	11.1
Ambulatory health care	100	9.3
Detention and Correctional Use	120	11.1
Residential Use		
Hotels and dormitories	200	18.6
Apartment buildings	200	18.6
Board and care, large	200	18.6
Industrial Use		
General and high hazard industrial	100	9.3
Special-purpose industrial	NA	NA
Business Use (other than below)	100	9.3
Air traffic control tower observation levels	40	3.7

Table 7.3.1.2 *Continued*

Use	(ft^2/person)[a]	(m^2/person)[a]
Storage Use		
In storage occupancies	NA	NA
In mercantile occupancies	300	27.9
In other than storage and mercantile occupancies	500	46.5
Mercantile Use		
Sales area on street floor[b,c]	30	2.8
Sales area on two or more street floors[c]	40	3.7
Sales area on floor below street floor[c]	30	2.8
Sales area on floors above street floor[c]	60	5.6
Floors or portions of floors used only for offices	See business use.	See business use.
Floors or portions of floors used only for storage, receiving, and shipping, and not open to general public	300	27.9
Mall buildings[d]	Per factors applicable to use of space[e]	

NA: Not applicable. The occupant load is the maximum probable number of occupants present at any time.

[a]All factors are expressed in gross area unless marked "net."

[b]For the purpose of determining occupant load in mercantile occupancies where, due to differences in the finished ground level of streets on different sides, two or more floors directly accessible from streets (not including alleys or similar back streets) exist, each such floor is permitted to be considered a street floor. The occupant load factor is one person for each 40 ft^2 (3.7 m^2) of gross floor area of sales space.

[c]For the purpose of determining occupant load in mercantile occupancies with no street floor, as defined in 3.3.253, but with access directly from the street by stairs or escalators, the floor at the point of entrance to the mercantile occupancy is considered the street floor.

[d]For any food court or other assembly use areas located in the mall that are not included as a portion of the gross leasable area of the mall building, the occupant load is calculated based on the occupant load factor for that use as specified in Table 7.3.1.2. The remaining mall area is not required to be assigned an occupant load.

[e]The portions of the mall that are considered a pedestrian way and not used as gross leasable area are not required to be assessed an occupant load based on Table 7.3.1.2. However, means of egress from a mall pedestrian way are required to be provided for an occupant load determined by dividing the gross leasable area of the mall building (not including anchor stores) by the appropriate lowest whole number occupant load factor from Figure 7.3.1.2(a) or Figure 7.3.1.2(b).

Each individual tenant space is required to have means of egress to the outside or to the mall based on occupant loads calculated by using the appropriate occupant load factor from Table 7.3.1.2.

Each individual anchor store is required to have means of egress independent of the mall.

(3) Auditoriums
(4) Other similar assembly occupancies with occupant loads exceeding 300 where there are noncontinuous programs

12.7.7.4 The requirement of 12.7.7.3 shall not apply to assembly occupancies in schools where used for nonpublic events.

12.7.8 Smoking.

12.7.8.1 Smoking in assembly occupancies shall be regulated by the authority having jurisdiction.

12.7.8.2 In rooms or areas where smoking is prohibited, plainly visible signs shall be posted that read as follows:

NO SMOKING

12.7.8.3 No person shall smoke in prohibited areas that are so posted, unless permitted by the authority having jurisdiction under both of the following conditions:

(1) Smoking shall be permitted on a stage only where it is a necessary and rehearsed part of a performance.
(2) Smoking shall be permitted only where the smoker is a regular performing member of the cast.

12.7.8.4 Where smoking is permitted, suitable ashtrays or receptacles shall be provided in convenient locations.

12.7.9 Seating.

12.7.9.1 Secured Seating.

12.7.9.1.1 Seats in assembly occupancies accommodating more than 200 persons shall be securely fastened to the floor, except where fastened together in groups of not less than three and as permitted by 12.7.9.1.2 and 12.7.9.2.

12.7.9.1.2 Balcony and box seating areas that are separated from other areas by rails, guards, partial-height walls, or other physical barriers and have a maximum of 14 seats shall be exempt from the requirement of 12.7.9.1.1.

12.7.9.2 Unsecured Seating.

12.7.9.2.1 Seats not secured to the floor shall be permitted in restaurants, night clubs, and other occupancies where fastening seats to the floor might be impracticable.

12.7.9.2.2 Unsecured seats shall be permitted, provided that, in the area used for seating, excluding such areas as dance floors and stages, there is not more than one seat for each 15 ft^2 (1.4 m^2) of net floor area, and adequate aisles to reach exits are maintained at all times.

12.7.9.2.3 Seating diagrams shall be submitted for approval by the authority having jurisdiction to permit an increase in occupant load per 7.3.1.3.

12.7.9.3 Occupant Load Posting.

12.7.9.3.1 Every room constituting an assembly occupancy and not having fixed seats shall have the occupant load of the room posted in a conspicuous place near the main exit from the room.

12.7.9.3.2 Approved signs shall be maintained in a legible manner by the owner or authorized agent.

12.7.9.3.3 Signs shall be durable and shall indicate the number of occupants permitted for each room use.

12.7.10 Maintenance of Outdoor Grandstands.

12.7.10.1 The owner shall provide for not less than annual inspection and required maintenance of each outdoor grandstand to ensure safe conditions.

12.7.10.2 At least biennially, the inspection shall be performed by a professional engineer, registered architect, or individual certified by the manufacturer.

12.7.10.3 Where required by the authority having jurisdiction, the owner shall provide a copy of the inspection report and certification that the inspection required by 12.7.10.2 has been performed.

12.7.11 Maintenance and Operation of Folding and Telescopic Seating.

12.7.11.1 Instructions in both maintenance and operation shall be transmitted to the owner by the manufacturer of the seating or his or her representative.

12.7.11.2 Maintenance and operation of folding and telescopic seating shall be the responsibility of the owner or his or her duly authorized representative and shall include all of the following:

(1) During operation of the folding and telescopic seats, the opening and closing shall be supervised by responsible personnel who shall ensure that the operation is in accordance with the manufacturer's instructions.
(2) Only attachments specifically approved by the manufacturer for the specific installation shall be attached to the seating.
(3) An annual inspection and required maintenance of each grandstand shall be performed to ensure safe conditions.
(4) At least biennially, the inspection shall be performed by a professional engineer, registered architect, or individual certified by the manufacturer.

12.7.12 Clothing. Clothing and personal effects shall not be stored in corridors, and spaces not separated from corridors, unless otherwise permitted by one of the following:

(1) This requirement shall not apply to corridors, and spaces not separated from corridors, that are protected by an approved, supervised automatic sprinkler system in accordance with Section 9.7.
(2) This requirement shall not apply to corridors, and spaces not separated from corridors, that are protected by a smoke detection system in accordance with Section 9.6.
(3) This requirement shall not apply to storage in metal lockers, provided that the required egress width is maintained.

12.7.13 Emergency Plans.

12.7.13.1 Emergency plans shall be provided in accordance with Section 4.8.

12.7.13.2 Where assembly occupancies are located in the high-rise portion of a building, the emergency plan shall include egress procedures, methods, and preferred evacuation routes for each event considered to be a life safety hazard that could impact the building, including the appropriateness of the use of elevators.

Chapter 13 Existing Assembly Occupancies

13.1 General Requirements.

13.1.1 Application.

13.1.1.1 The requirements of this chapter shall apply to existing buildings or portions thereof currently occupied as assembly occupancies, unless otherwise specified by 13.1.1.4. *(See 3.3.188.2 for definition of assembly occupancy.)*

13.1.1.2 Administration. The provisions of Chapter 1, Administration, shall apply.

13.1.1.3 General. The provisions of Chapter 4, General, shall apply.

13.1.1.4 An existing building housing an assembly occupancy established prior to the effective date of this *Code* shall be permitted to be approved for continued use if it conforms to, or is made to conform to, the provisions of this *Code* to the extent that, in the opinion of the authority having jurisdiction, reasonable life safety against the hazards of fire, explosion, and panic is provided and maintained.

13.1.1.5 Additions to existing buildings shall conform to the requirements of 4.6.7.

13.1.1.6 Existing portions of buildings shall be upgraded if the addition results in an increase in the required minimum number of separate means of egress in accordance with 7.4.1.2.

13.1.1.7 Existing portions of the structure shall not be required to be modified, provided that both of the following criteria are met:

(1) The new construction has not diminished the fire safety features of the facility.
(2) The addition does not result in an increase in the required minimum number of separate means of egress in accordance with 7.4.1.2.

13.1.1.8 An assembly occupancy in which an occupant load increase results in an increase in the required minimum number of separate means of egress, in accordance with 7.4.1.2, shall meet the requirements for new construction.

13.1.2* Classification of Occupancy. See 6.1.2.

13.1.3 Multiple Occupancies.

13.1.3.1 General. Multiple occupancies shall be in accordance with 6.1.14.

13.1.3.2* Simultaneous Occupancy. Exits shall be sufficient for simultaneous occupancy of both the assembly occupancy and other parts of the building, except where the authority having jurisdiction determines that the conditions are such that simultaneous occupancy will not occur.

13.1.3.3 Assembly and Mercantile Occupancies in Mall Buildings.

13.1.3.3.1 The provisions of Chapter 13 shall apply to the assembly occupancy tenant space.

13.1.3.3.2 The provisions of 37.4.4 shall be permitted to be used outside the assembly occupancy tenant space.

13.1.4 Definitions.

13.1.4.1 General. For definitions, see Chapter 3, Definitions.

13.1.4.2* Special Definitions. A list of special terms used in this chapter follows:

(1) **Aisle Accessway.** See 3.3.11.
(2) **Exhibit.** See 3.3.77.
(3) **Exhibitor.** See 3.3.78.
(4) **Exposition.** See 3.3.84.
(5) **Exposition Facility.** See 3.3.88.1.
(6) **Festival Seating.** See 3.3.237.1.
(7) **Flow Time.** See 3.3.115.
(8) **Fly Gallery.** See 3.3.116.
(9) **Gridiron.** See 3.3.126.
(10) **Legitimate Stage.** See 3.3.262.1.
(11) **Life Safety Evaluation.** See 3.3.158.
(12) **Multilevel Play Structure.** See 3.3.271.5.
(13) **Pinrail.** See 3.3.208.
(14) **Platform.** See 3.3.209.
(15) **Proscenium Wall.** See 3.3.287.2.
(16) **Regular Stage.** See 3.3.262.2.
(17) **Smoke-Protected Assembly Seating.** See 3.3.237.4.
(18) **Special Amusement Building.** See 3.3.36.10.
(19) **Stage.** See 3.3.262.
(20) **Temporary Platform.** See 3.3.209.1.

13.1.5 Classification of Hazard of Contents. Contents of assembly occupancies shall be classified in accordance with the provisions of Section 6.2.

13.1.6 Minimum Construction Requirements. Assembly occupancies shall be limited to the building construction types specified in Table 13.1.6, based on the number of stories in height as defined in 4.6.3, unless otherwise permitted by the following *(see 8.2.1)*:

(1) This requirement shall not apply to outdoor grandstands of Type I or Type II construction.
(2) This requirement shall not apply to outdoor grandstands of Type III, Type IV, or Type V construction that meet the requirements of 13.4.8.
(3) This requirement shall not apply to grandstands of noncombustible construction supported by the floor in a building meeting the construction requirements of Table 13.1.6.
(4) This requirement shall not apply to assembly occupancies within mall buildings in accordance with 37.4.4.

13.1.7 Occupant Load.

13.1.7.1* General. The occupant load, in number of persons for whom means of egress and other provisions are required, shall be determined on the basis of the occupant load factors of Table 7.3.1.2 that are characteristic of the use of the space or shall be determined as the maximum probable population of the space under consideration, whichever is greater.

13.1.7.1.1 In areas not in excess of 10,000 ft^2 (930 m^2), the occupant load shall not exceed one person in 5 ft^2 (0.46 m^2).

13.1.7.1.2 In areas in excess of 10,000 ft^2 (930 m^2), the occupant load shall not exceed one person in 7 ft^2 (0.65 m^2).

13.1.7.1.3 The authority having jurisdiction shall be permitted to establish the occupant load as the number of persons for which the existing means of egress is adequate, provided that measures are established to prevent occupancy by a greater number of persons.

13.1.7.2 Waiting Spaces. In theaters and other assembly occupancies where persons are admitted to the building at times when seats are not available, or when the permitted occupant load has been reached based on 13.1.7.1 and persons are allowed to wait in a lobby or similar space until seats or space is available, all of the following requirements shall apply:

(1) Such use of a lobby or similar space shall not encroach upon the required clear width of exits.
(2) The waiting spaces shall be restricted to areas other than the required means of egress.
(3) Exits shall be provided for the waiting spaces on the basis of one person for each 3 ft^2 (0.28 m^2) of waiting space area.
(4) Exits for waiting spaces shall be in addition to the exits specified for the main auditorium area and shall conform in construction and arrangement to the general rules for exits given in this chapter.

Table 13.1.6 Construction Type Limitations

Construction Type	Sprinklered[a]	Stories Below	Stories in Height[b] 1	2	3	4	≥5
I (442)[c, d]	Yes	X	X	X	X	X	X
	No	NP	X	X	X	X	X3
I (332)[c, d]	Yes	X	X	X	X	X	X
	No	NP	X	X	X	X	X3
II (222)[c, d]	Yes	X	X	X	X	X	X
	No	NP	X	X	X	X	X3
II (111)[c, d]	Yes	X1	X	X	X	X3	NP
	No	NP	X	X	X3	NP	NP
II (000)	Yes	X2	X	X4	NP	NP	NP
	No	NP	X3	NP	NP	NP	NP
III (211)	Yes	X1	X	X	X	X3	NP
	No	NP	X	X	X4	NP	NP
III (200)	Yes	X2	X	X4	NP	NP	NP
	No	NP	X3	NP	NP	NP	NP
IV (2HH)	Yes	X1	X	X	X	X3	NP
	No	NP	X	X	X4	NP	NP
V (111)	Yes	X1	X	X	X	X3	NP
	No	NP	X	X	X4	NP	NP
V (000)	Yes	X2	X	X4	NP	NP	NP
	No	NP	X3	NP	NP	NP	NP

X: Permitted for assembly of any occupant load.
X1: Permitted for assembly of any occupant load, but limited to one story below the level of exit discharge.
X2: Permitted for assembly limited to an occupant load of 1000 or less, and limited to one story below the level of exit discharge.
X3: Permitted for assembly limited to an occupant load of 1000 or less.
X4: Permitted for assembly limited to an occupant load of 300 or less.
NP: Not permitted.
[a]Protected by an approved automatic sprinkler system in accordance with Section 9.7 in the following locations:
(1) Throughout the story of the assembly occupancy
(2) Throughout all stories intervening between the story of the assembly occupancy and the level of exit discharge
(3) Throughout the level of exit discharge if there are any openings between the level of exit discharge and the exits serving the assembly occupancy
[b]See 4.6.3.
[c]Where every part of the structural framework of roofs in Type I or Type II construction is 20 ft (6100 mm) or more above the floor immediately below, omission of all fire protection of the structural members is permitted, including protection of trusses, roof framing, decking, and portions of columns above 20 ft (6100 mm).
[d]In open-air fixed seating facilities, including stadia, omission of fire protection of structural members exposed to the outside atmosphere is permitted where substantiated by an approved engineering analysis.

13.1.7.3 Life Safety Evaluation. Where the occupant load of an assembly occupancy exceeds 6000, a life safety evaluation shall be performed in accordance with 13.4.1.

13.1.7.4 Outdoor Facilities. In outdoor facilities, where approved by the authority having jurisdiction, the number of occupants who are each provided with not less than 15 ft^2 (1.4 m^2) of lawn surface shall be permitted to be excluded from the maximum occupant load of 6000 of 13.1.7.3 in determining the need for a life safety evaluation.

13.2 Means of Egress Requirements.

13.2.1 General. All means of egress shall be in accordance with Chapter 7 and this chapter.

13.2.2 Means of Egress Components.

13.2.2.1 Components Permitted. Components of means of egress shall be limited to the types described in 13.2.2.2 through 13.2.2.12.

13.2.2.2 Doors.

13.2.2.2.1 Doors complying with 7.2.1 shall be permitted.

13.2.2.2.2 Assembly occupancies with occupant loads of 300 or less in malls *(see 37.4.4.2.2)* shall be permitted to have horizontal or vertical security grilles or doors complying with 7.2.1.4.1(3) on the main entrance/exits.

13.2.2.2.3 Any door in a required means of egress from an area having an occupant load of 100 or more persons shall be permitted to be provided with a latch or lock only if the latch or lock is panic hardware or fire exit hardware complying with 7.2.1.7, unless otherwise permitted by one of the following:

(1) This requirement shall not apply to delayed-egress locks as permitted in 13.2.2.2.5.
(2) This requirement shall not apply to access-controlled egress doors as permitted in 13.2.2.2.6.

13.2.2.2.4 Locking devices complying with 7.2.1.5.5 shall be permitted to be used on a single door or a single pair of doors if both of the following conditions apply:

(1) The door or pair of doors serve as the main exit from assembly occupancies having an occupant load not greater than 600.
(2) Any latching devices on such a door(s) from an assembly occupancy having an occupant load of 100 or more are released by panic hardware or fire exit hardware.

13.2.2.2.5 Delayed-egress locks complying with 7.2.1.6.1 shall be permitted on doors other than main entrance/exit doors.

13.2.2.2.6 Doors in the means of egress shall be permitted to be equipped with an approved access control system complying with 7.2.1.6.2, and such doors shall not be locked from the egress side when the assembly occupancy is occupied. *(See 7.2.1.1.3.)*

13.2.2.2.7 Elevator lobby exit access door locking in accordance with 7.2.1.6.3 shall be permitted.

13.2.2.2.8 Revolving doors complying with the requirements of 7.2.1.10 for new construction shall be permitted.

13.2.2.2.9 The provisions of 7.2.1.11.1.1 to permit turnstiles where revolving doors are permitted shall not apply.

13.2.2.2.10 No turnstiles or other devices that restrict the movement of persons shall be installed in any assembly occupancy in such a manner as to interfere with required means of egress facilities.

13.2.2.3 Stairs.

13.2.2.3.1 General. Stairs complying with 7.2.2 shall be permitted, unless one of the following criteria applies:

(1)*Stairs serving seating that is designed to be repositioned shall not be required to comply with 7.2.2.3.1.
(2) This requirement shall not apply to stages and platforms as permitted by 13.4.5.
(3) The stairs connecting only a stage or platform and the immediately adjacent assembly seating shall be permitted to have a handrail in the center only or on one side only.
(4) The stairs connecting only a stage or platform and the immediately adjacent assembly seating shall be permitted to omit the guards required by 7.1.8 where both of the following criteria are met:
   (a) The guard would restrict audience sight lines to the stage or platform.
   (b) The height between any part of the stair and the adjacent floor is not more than 42 in. (1065 mm).

13.2.2.3.2 Catwalk, Gallery, and Gridiron Stairs.

13.2.2.3.2.1 Noncombustible grated stair treads and landing floors shall be permitted in means of egress from lighting and access catwalks, galleries, and gridirons.

13.2.2.3.2.2 Spiral stairs complying with 7.2.2.2.3 shall be permitted in means of egress from lighting and access catwalks, galleries, and gridirons.

13.2.2.4 Smokeproof Enclosures. Smokeproof enclosures complying with 7.2.3 shall be permitted.

13.2.2.5 Horizontal Exits. Horizontal exits complying with 7.2.4 shall be permitted.

13.2.2.6 Ramps. Ramps complying with 7.2.5 shall be permitted.

13.2.2.7 Exit Passageways. Exit passageways complying with 7.2.6 shall be permitted.

13.2.2.8 Escalators and Moving Walks. Escalators and moving walks complying with 7.2.7 shall be permitted.

13.2.2.9 Fire Escape Stairs. Fire escape stairs complying with 7.2.8 shall be permitted.

13.2.2.10 Fire Escape Ladders.

13.2.2.10.1 Fire escape ladders complying with 7.2.9 shall be permitted.

13.2.2.10.2 For ladders serving catwalks, the three-person limitation in 7.2.9.1(3) shall be permitted to be increased to ten persons.

13.2.2.11 Alternating Tread Devices. Alternating tread devices complying with 7.2.11 shall be permitted.

13.2.2.12 Areas of Refuge. Areas of refuge complying with 7.2.12 shall be permitted.

13.2.3 Capacity of Means of Egress.

13.2.3.1 General. The capacity of means of egress shall be in accordance with one of the following:

(1) Section 7.3 for other than theater-type seating or smoke-protected assembly seating

(2) 13.2.3.2 for rooms with theater-type seating or similar seating arranged in rows
(3) 13.4.2 for smoke-protected assembly seating

13.2.3.2* Theater-Type Seating. Minimum clear widths of aisles and other means of egress serving theater-type seating, or similar seating arranged in rows, shall be in accordance with Table 13.2.3.2.

Table 13.2.3.2 Capacity Factors

	Clear Width per Seat Served			
	Stairs		Passageways, Ramps, and Doorways	
No. of Seats	in.	mm	in.	mm
Unlimited	0.3 *AB*	7.6 *AB*	0.22 *C*	5.6 *C*

13.2.3.3 Width Modifications. The minimum clear widths shown in Table 13.2.3.2 shall be modified in accordance with all of the following:

(1) If risers exceed 7 in. in height, the stair width in Table 13.2.3.2 shall be multiplied by factor *A*, where *A* equals the following:

$$A = 1 + \frac{\text{riser height} - 7}{5}$$

(2) If risers exceed 178 mm in height, the stair width in Table 13.2.3.2 shall be multiplied by factor *A*, where *A* equals the following:

$$A = 1 + \frac{\text{riser height} - 178}{125}$$

(3) Stairs not having a handrail within a 30 in. (760 mm) horizontal distance shall be 25 percent wider than otherwise calculated; that is, their width shall be multiplied by factor *B*, where *B* equals the following:

$$B = 1.25$$

(4) Ramps steeper than 1 in 10 slope where used in ascent shall have their width increased by 10 percent; that is, their width shall be multiplied by factor *C*, where *C* equals the following:

$$C = 1.10$$

13.2.3.4 Lighting and Access Catwalks. The requirements of 13.2.3.2 and 13.2.3.3 shall not apply to lighting and access catwalks as permitted by 13.4.5.9.

13.2.3.5 Bleachers Aisles. In seating composed entirely of bleachers for which the row-to-row dimension is 28 in. (710 mm) or less, and from which front egress is not limited, aisles shall not be required to exceed 66 in. (1675 mm) in width.

13.2.3.6 Main Entrance/Exit.

13.2.3.6.1 Every assembly occupancy shall be provided with a main entrance/exit.

13.2.3.6.2 The main entrance/exit shall be of a width that accommodates one-half of the total occupant load.

13.2.3.6.3 The main entrance/exit shall be at the level of exit discharge or shall connect to a stairway or ramp leading to a street.

13.2.3.6.4 Reserved.

13.2.3.6.5 Where the main entrance/exit from an assembly occupancy is through a lobby or foyer, the aggregate capacity of all exits from the lobby or foyer shall be permitted to provide the required capacity of the main entrance/exit, regardless of whether all such exits serve as entrances to the building.

13.2.3.6.6* In assembly occupancies where there is no well-defined main entrance/exit, exits shall be permitted to be distributed around the perimeter of the building, provided that the total exit width furnishes not less than 100 percent of the width needed to accommodate the permitted occupant load.

13.2.3.7 Other Exits. Each level of an assembly occupancy shall have access to the main entrance/exit and shall be provided with additional exits of a width to accommodate not less than one-half of the total occupant load served by that level.

13.2.3.7.1 Additional exits shall discharge in accordance with 13.2.7.

13.2.3.7.2 Additional exits shall be located as far apart as practicable and as far from the main entrance/exit as practicable.

13.2.3.7.3 Additional exits shall be accessible from a cross aisle or a side aisle.

13.2.3.7.4 In assembly occupancies where there is no well-defined main entrance/exit, exits shall be permitted to be distributed around the perimeter of the building, provided that the total exit width furnishes not less than 100 percent of the width required to accommodate the permitted occupant load.

13.2.4* Number of Means of Egress.

13.2.4.1 The number of means of egress shall be in accordance with Section 7.4, other than fenced outdoor assembly occupancies in accordance with 13.2.4.4, unless otherwise permitted by 13.2.4.2 or 13.2.4.3.

13.2.4.2 Assembly occupancies with occupant loads of 600 or fewer shall have two separate means of egress.

13.2.4.3 Assembly occupancies with occupant loads greater than 600 but fewer than 1000 shall have three separate means of egress.

13.2.4.4 A fenced outdoor assembly occupancy shall have not less than two widely separated means of egress from the enclosure, unless otherwise required by one of the following:

(1) If more than 6000 persons are to be served by such means of egress, there shall be not less than three means of egress.
(2) If more than 9000 persons are to be served by such means of egress, there shall be not less than four means of egress.

13.2.4.5 Balconies or mezzanines having an occupant load not exceeding 50 shall be permitted to be served by a single means of egress, and such means of egress shall be permitted to lead to the floor below.

13.2.4.6 Balconies or mezzanines having an occupant load exceeding 50, but not exceeding 100, shall have not less than two remote means of egress, but both such means of egress shall be permitted to lead to the floor below.

13.2.4.7 Balconies or mezzanines having an occupant load exceeding 100 shall have means of egress as described in 7.4.1.

13.2.4.8 A second means of egress shall not be required from lighting and access catwalks, galleries, and gridirons where a means of escape to a floor or a roof is provided. Ladders, alternating tread devices, or spiral stairs shall be permitted in such means of escape.

13.2.5 Arrangement of Means of Egress.

13.2.5.1 General.

13.2.5.1.1 Means of egress shall be arranged in accordance with Section 7.5.

13.2.5.1.2 A common path of travel shall be permitted for the first 20 ft (6100 mm) from any point where the common path serves any number of occupants, and for the first 75 ft (23 m) from any point where the common path serves not more than 50 occupants.

13.2.5.1.3 Dead-end corridors shall not exceed 20 ft (6100 mm).

13.2.5.2 Access Through Hazardous Areas. Means of egress shall not be permitted through kitchens, storerooms, restrooms, closets, platforms, stages, or hazardous areas as described in 13.3.2.

13.2.5.3 Reserved.

13.2.5.4 General Requirements for Access and Egress Routes Within Assembly Areas.

13.2.5.4.1 Festival seating, as defined in 3.3.237.1, shall be prohibited within a building, unless otherwise permitted by one of the following:

(1) Festival seating shall be permitted in assembly occupancies having occupant loads of 250 or less.
(2) Festival seating shall be permitted in assembly occupancies where occupant loads exceed 250, provided that an approved life safety evaluation has been performed. *(See 13.4.1.)*

13.2.5.4.2* Access and egress routes shall be maintained so that any individual is able to move without undue hindrance, on personal initiative and at any time, from an occupied position to the exits.

13.2.5.4.3* Access and egress routes shall be maintained so that crowd management, security, and emergency medical personnel are able to reach any individual at any time, without undue hindrance.

13.2.5.4.4* The width of aisle accessways and aisles shall provide sufficient egress capacity for the number of persons accommodated by the catchment area served by the aisle accessway or aisle in accordance with 13.2.3.2, or for smoke-protected assembly seating in accordance with 13.4.2.

13.2.5.4.5 Where aisle accessways or aisles converge to form a single path of egress travel, the required egress capacity of that path shall be not less than the combined required capacity of the converging aisle accessways and aisles.

13.2.5.4.6 Those portions of aisle accessways and aisles where egress is possible in either of two directions shall be uniform in required width, unless otherwise permitted by 13.2.5.4.7.

13.2.5.4.7 The requirement of 13.2.5.4.6 shall not apply to those portions of aisle accessways where the required width, not including the seat space described by 13.2.5.7.3, does not exceed 12 in. (305 mm).

13.2.5.4.8 In the case of side boundaries for aisle accessways or aisles, other than those for nonfixed seating at tables, the clear width shall be measured to boundary elements such as walls, guardrails, handrails, edges of seating, tables, and side edges of treads, and said measurement shall be made horizontally to the vertical projection of the elements, resulting in the smallest width measured perpendicularly to the line of travel.

13.2.5.5* Aisle Accessways Serving Seating Not at Tables.

13.2.5.5.1* The required clear width of aisle accesses between rows of seating shall be determined as follows:

(1) Horizontal measurements shall be made, between vertical planes, from the back of one seat to the front of the most forward projection of the seat immediately behind it.
(2) Where the entire row consists of automatic- or self-rising seats that comply with ASTM F 851, *Standard Test Method for Self-Rising Seat Mechanisms*, the measurement shall be permitted to be made with the seats in the up position.

13.2.5.5.2 The aisle accessway between rows of seating shall have a clear width of not less than 12 in. (305 mm), and this minimum shall be increased as a function of row length in accordance with 13.2.5.5.4 and 13.2.5.5.5.

13.2.5.5.3 If used by not more than four persons, no minimum clear width shall be required for the portion of an aisle accessway having a length not exceeding 6 ft (1830 mm), measured from the center of the seat farthest from the aisle.

13.2.5.5.4* Rows of seating served by aisles or doorways at both ends shall not exceed 100 seats per row.

13.2.5.5.4.1 The 12 in. (305 mm) minimum clear width of aisle accessway specified in 13.2.5.5.2 shall be increased by 0.3 in. (7.6 mm) for every seat over a total of 14 but shall not be required to exceed 22 in. (560 mm).

13.2.5.5.4.2 The requirement of 13.2.5.5.4.1 shall not apply to smoke-protected assembly seating as permitted by 13.4.2.7.

13.2.5.5.5 Rows of seating served by an aisle or doorway at one end only shall have a path of travel not exceeding 30 ft (9.1 m) in length from any seat to an aisle.

13.2.5.5.5.1 The 12 in. (305 mm) minimum clear width of aisle accessway specified in 13.2.5.5.2 shall be increased by 0.6 in. (15 mm) for every seat over a total of seven.

13.2.5.5.5.2 The requirements of 13.2.5.5.5 and 13.2.5.5.5.1 shall not apply to smoke-protected assembly seating as permitted by 13.4.2.8 and 13.4.2.9.

13.2.5.5.6 Rows of seating using tablet-arm chairs shall be permitted only if the clear width of aisle accessways complies with the requirements of 13.2.5.5 when measured under one of the following conditions:

(1) The clear width is measured with the tablet arm in the usable position.

clear width of the aisle accessway or aisle shall be made to a line 19 in. (485 mm), measured perpendicularly to the edge of the table, away from the edge of said table.

13.2.5.7.4* The minimum required clear width of an aisle accessway, measured in accordance with 13.2.5.4.8 and 13.2.5.7.3, shall be increased beyond the 12 in. (305 mm) requirement of 13.2.5.7.1 by ½ in. (13 mm) for each additional 12 in. (305 mm) or fraction thereof beyond 12 ft (3660 mm) of aisle accessway length, where measured from the center of the seat farthest from an aisle.

13.2.5.7.5 The path of travel along the aisle accessway shall not exceed 36 ft (11 m) from any seat to the closest aisle or egress doorway.

13.2.5.8 Aisles Serving Seating at Tables.

13.2.5.8.1* Aisles that contain steps or that are ramped, such as aisles serving dinner theater–style configurations, shall comply with the requirements of 13.2.5.6.

13.2.5.8.2* The width of aisles serving seating at tables shall be not less than 44 in. (1120 mm) where serving an occupant load exceeding 50, and 36 in. (915 mm) where serving an occupant load of 50 or fewer.

13.2.5.8.3* Where nonfixed seating is located between a table and an aisle, the measurement of required clear width of the aisle shall be made to a line 19 in. (485 mm), measured perpendicularly to the edge of the table, away from the edge of said table.

13.2.5.9 Approval of Layouts.

13.2.5.9.1 Where required by the authority having jurisdiction, plans drawn to scale showing the arrangement of furnishings or equipment shall be submitted to the authority by the building owner, manager, or authorized agent to substantiate conformance with the provisions of 13.2.5.

13.2.5.9.2 The layout plans shall constitute the only acceptable arrangement, unless one of the following criteria is met:

(1) The plans are revised.
(2) Additional plans are submitted and approved.
(3) Temporary deviations from the specifications of the approved plans are used, provided that the occupant load is not increased and the intent of 13.2.5.9 is maintained.

13.2.6 Travel Distance to Exits.

13.2.6.1 Travel distance shall be measured in accordance with Section 7.6.

13.2.6.2 Exits shall be arranged so that the total length of travel from any point to reach an exit shall not exceed 200 ft (61 m) in any assembly occupancy, unless otherwise permitted by one of the following:

(1) The travel distance shall not exceed 250 ft (76 m) in assembly occupancies protected throughout by an approved automatic sprinkler system in accordance with Section 9.7.
(2) The travel distance requirement shall not apply to smoke-protected assembly seating as permitted by 13.4.2.12, 13.4.2.13, and 13.4.2.14.

13.2.7 Discharge from Exits.

13.2.7.1 Exit discharge shall comply with Section 7.7.

13.2.7.2 The level of exit discharge shall be measured at the point of principal entrance to the building.

13.2.7.3 Where the principal entrance to an assembly occupancy is via a terrace, either raised or depressed, such terrace shall be permitted to be considered to be the first story in height for the purposes of Table 13.1.6 where all of the following criteria are met:

(1) The terrace is at least as long, measured parallel to the building, as the total width of the exit(s) it serves but not less than 60 in. (1525 mm) long.
(2) The terrace is at least as wide, measured perpendicularly to the building, as the exit(s) it serves but not less than 60 in. (1525 mm) wide.
(3) Required stairs leading from the terrace to the finished ground level are protected in accordance with 7.2.2.6.3 or are not less than 10 ft (3050 mm) from the building.

13.2.8 Illumination of Means of Egress. Means of egress, other than for private party tents not exceeding 1200 ft^2 (112 m^2), shall be illuminated in accordance with Section 7.8.

13.2.9 Emergency Lighting.

13.2.9.1 Emergency lighting, other than that permitted by 13.2.9.3, shall be provided in accordance with Section 7.9.

13.2.9.2 Private party tents not exceeding 1200 ft^2 (112 m^2) shall not be required to have emergency lighting.

13.2.9.3 Assembly occupancies with an occupant load not exceeding 300 and used exclusively for a place of worship shall not be required to have emergency lighting.

13.2.10 Marking of Means of Egress.

13.2.10.1 Means of egress shall be provided with signs in accordance with Section 7.10.

13.2.10.2 Exit markings shall not be required on the seating side of vomitories from seating areas where exit marking is provided in the concourse and where such marking is readily apparent from the vomitories.

13.2.10.3 Evacuation diagrams in accordance with 7.10.8.5 shall be provided.

13.2.11 Special Means of Egress Features.

13.2.11.1 Guards and Railings: Boxes, Balconies, and Galleries. Boxes, balconies, and galleries shall meet the following criteria:

(1) The fasciae of boxes, balconies, and galleries shall rise not less than 26 in. (660 mm) above the adjacent floor or shall have substantial railings not less than 26 in. (660 mm) above the adjacent floor.
(2) The height of the rail above footrests on the adjacent floor immediately in front of a row of seats shall be not less than 26 in. (660 mm), and the following also shall apply:
   (a) Railings at the ends of aisles shall be not less than 36 in. (915 mm) high for the full width of the aisle.
   (b) Railings at the end of aisles shall be not less than 36 in. (915 mm) high at the ends of aisles where steps occur.
(3) Aisle accessways adjacent to orchestra pits and vomitories, and all cross aisles, shall be provided with railings not less than 26 in. (660 mm) above the adjacent floor.
(4) The requirement of 13.2.11.1(3) shall not apply where the backs of seats located at the front of the aisle project 24 in. (610 mm) or more above the adjacent floor of the aisle.

(5) Guardrails shall not be required on the audience side of stages, raised platforms, and other raised floor areas such as runways, ramps, and side stages used for entertainment or presentations.
(6) Permanent guardrails shall not be required at vertical openings in the performance area of stages.
(7) Guardrails shall not be required where the side of an elevated walking surface is required to be open for the normal functioning of special lighting or for access and use of other special equipment.

13.2.11.2 Lockups. Lockups in assembly occupancies, other than approved existing lockups, shall comply with the requirements of 23.4.5.

13.3 Protection.

13.3.1 Protection of Vertical Openings. Any vertical opening shall be enclosed or protected in accordance with Section 8.6, unless otherwise permitted by one of the following:

(1)*Stairs or ramps shall be permitted to be unenclosed between balconies or mezzanines and main assembly areas located below, provided that the balcony or mezzanine is open to the main assembly area.
(2) Exit access stairs from lighting and access catwalks, galleries, and gridirons shall not be required to be enclosed.
(3) Assembly occupancies protected by an approved, supervised automatic sprinkler system in accordance with Section 9.7 shall be permitted to have unprotected vertical openings between any two adjacent floors, provided that such openings are separated from unprotected vertical openings serving other floors by a barrier complying with 8.6.5.
(4) Assembly occupancies protected by an approved, supervised automatic sprinkler system in accordance with Section 9.7 shall be permitted to have convenience stair openings in accordance with 8.6.9.2.
(5) Use of the following alternative materials shall be permitted where assemblies constructed of such materials are in good repair and free of any condition that would diminish their original fire resistance characteristics:
   (a) Existing wood lath and plaster
   (b) Existing ½ in. (13 mm) gypsum wallboard
   (c) Existing installations of ¼ in. (6.3 mm) thick wired glass that are, or are rendered, inoperative and fixed in the closed position
   (d) Other existing materials having similar fire resistance capabilities

13.3.2 Protection from Hazards.

13.3.2.1 Service Equipment, Hazardous Operations or Processes, and Storage Facilities.

13.3.2.1.1 Rooms containing high-pressure boilers, refrigerating machinery of other than the domestic refrigerator type, large transformers, or other service equipment subject to explosion shall meet both of the following requirements:

(1) Such rooms shall not be located directly under or abutting required exits.
(2) Such rooms shall be separated from other parts of the building by fire barriers in accordance with Section 8.3 that have a minimum 1-hour fire resistance rating or shall be protected by automatic extinguishing systems in accordance with Section 8.7.

13.3.2.1.2 Rooms or spaces for the storage, processing, or use of materials specified in 13.3.2.1.2(1) through (3) shall be protected in accordance with the following:

(1) Separation from the remainder of the building by fire barriers having a minimum 1-hour fire resistance rating or protection of such rooms by automatic extinguishing systems as specified in Section 8.7 in the following areas:
   (a) Boiler and furnace rooms, unless otherwise protected by one of the following:
      i. The requirement of 13.3.2.1.2(1)(a) shall not apply to rooms enclosing furnaces, heating and air-handling equipment, or compressor equipment with a total aggregate input rating less than 200,000 Btu (211 MJ), provided that such rooms are not used for storage.
      ii. The requirement of 13.3.2.1.2(1)(a) shall not apply to attic locations of the rooms addressed in 13.3.2.1.2(1)(a)i, provided that such rooms comply with the draftstopping requirements of 8.6.11.
   (b) Rooms or spaces used for the storage of combustible supplies in quantities deemed hazardous by the authority having jurisdiction
   (c) Rooms or spaces used for the storage of hazardous materials or flammable or combustible liquids in quantities deemed hazardous by recognized standards
(2) Separation from the remainder of the building by fire barriers having a minimum 1-hour fire resistance rating and protection of such rooms by automatic extinguishing systems as specified in Section 8.7 in the following areas:
   (a) Laundries
   (b) Maintenance shops, including woodworking and painting areas
   (c) Rooms or spaces used for processing or use of combustible supplies deemed hazardous by the authority having jurisdiction
   (d) Rooms or spaces used for processing or use of hazardous materials or flammable or combustible liquids in quantities deemed hazardous by recognized standards
(3) Protection as permitted in accordance with 9.7.1.2 where automatic extinguishing is used to meet the requirements of 13.3.2.1.2(1) or (2)

13.3.2.2 Cooking Equipment. Cooking equipment shall be protected in accordance with 9.2.3, unless the cooking equipment is one of the following types:

(1) Outdoor equipment
(2) Portable equipment not flue-connected
(3) Equipment used only for food warming

13.3.3 Interior Finish.

13.3.3.1 General. Interior finish shall be in accordance with Section 10.2.

13.3.3.2 Corridors, Lobbies, and Enclosed Stairways. Interior wall and ceiling finish materials complying with Section 10.2 shall be Class A or Class B in all corridors and lobbies and shall be Class A in enclosed stairways.

13.3.3.3 Assembly Areas. Interior wall and ceiling finish materials complying with Section 10.2 shall be Class A or Class B in general assembly areas having occupant loads of more than 300 and shall be Class A, Class B, or Class C in assembly areas having occupant loads of 300 or fewer.

13.3.3.4 Screens. Screens on which pictures are projected shall comply with requirements of Class A or Class B interior finish in accordance with Section 10.2.

13.3.3.5 Interior Floor Finish. (No requirements.)

13.3.4 Detection, Alarm, and Communications Systems.

13.3.4.1 General.

13.3.4.1.1 Assembly occupancies with occupant loads of more than 300 and all theaters with more than one audience-viewing room shall be provided with an approved fire alarm system in accordance with 9.6.1 and 13.3.4, unless otherwise permitted by 13.3.4.1.2, 13.3.4.1.3, or 13.3.4.1.4.

13.3.4.1.2 Assembly occupancies that are a part of a multiple occupancy protected as a mixed occupancy *(see 6.1.14)* shall be permitted to be served by a common fire alarm system, provided that the individual requirements of each occupancy are met.

13.3.4.1.3 Voice communication or public address systems complying with 13.3.4.3.6 shall not be required to comply with 9.6.1.

13.3.4.1.4 The requirement of 13.3.4.1.1 shall not apply to assembly occupancies where, in the judgment of the authority having jurisdiction, adequate alternative provisions exist or are provided for the discovery of a fire and for alerting the occupants promptly.

13.3.4.2 Initiation.

13.3.4.2.1 Initiation of the required fire alarm system shall be by both of the following means, and the system shall be provided with an emergency power source:

(1) Manual means in accordance with 9.6.2.1(1), unless otherwise permitted by one of the following:
   (a) The requirement of 13.3.4.2.1(1) shall not apply where initiation is by means of an approved automatic fire detection system in accordance with 9.6.2.1(2) that provides fire detection throughout the building.
   (b) The requirement of 13.3.4.2.1(1) shall not apply where initiation is by means of an approved automatic sprinkler system in accordance with 9.6.2.1(3) that provides fire detection and protection throughout the building.
(2) Where automatic sprinklers are provided, initiation of the fire alarm system by sprinkler system waterflow, even where manual fire alarm boxes are provided in accordance with 13.3.4.2.1(1)

13.3.4.2.2 The initiating device shall be capable of transmitting an alarm to a receiving station, located within the building, that is constantly attended when the assembly occupancy is occupied.

13.3.4.2.3* In assembly occupancies with occupant loads of more than 300, automatic detection shall be provided in all hazardous areas that are not normally occupied, unless such areas are protected throughout by an approved automatic sprinkler system in accordance with Section 9.7.

13.3.4.3 Notification. The required fire alarm system shall activate an audible alarm in a constantly attended receiving station within the building when occupied for purposes of initiating emergency action.

13.3.4.3.1 Positive alarm sequence in accordance with 9.6.3.4 shall be permitted.

13.3.4.3.2 A presignal system in accordance with 9.6.3.3 shall be permitted.

13.3.4.3.3 Occupant notification shall be by means of voice announcements in accordance with 9.6.3.9 initiated by the person in the constantly attended receiving station.

13.3.4.3.4 Reserved.

13.3.4.3.5 Reserved.

13.3.4.3.6 The announcement shall be permitted to be made via a voice communication or public address system in accordance with 9.6.3.9.2.

13.3.4.3.7 Where the authority having jurisdiction determines that a constantly attended receiving station is impractical, automatically transmitted evacuation or relocation instructions shall be provided in accordance with *NFPA 72, National Fire Alarm and Signaling Code.*

13.3.5 Extinguishment Requirements. See also 13.1.6, 13.2.6, and 13.3.2.

13.3.5.1 Where the occupant load exceeds 100, the following assembly occupancies shall be protected throughout by an approved, supervised automatic sprinkler system in accordance with 9.7.1.1(1):

(1) Dance halls
(2) Discotheques
(3) Nightclubs
(4) Assembly occupancies with festival seating

13.3.5.2 Any assembly occupancy used or capable of being used for exhibition or display purposes shall be protected throughout by an approved automatic sprinkler system in accordance with Section 9.7 where the exhibition or display area exceeds 15,000 ft^2 (1400 m^2).

13.3.5.3 The sprinklers specified by 13.3.5.2 shall not be required where otherwise permitted in the following locations:

(1) Locations in stadia and arenas as follows:
   (a) Over the floor areas used for contest, performance, or entertainment
   (b) Over the seating areas
   (c) Over open-air concourses where an approved engineering analysis substantiates the ineffectiveness of the sprinkler protection due to building height and combustible loading
(2) Locations in unenclosed stadia and arenas as follows:
   (a) Press boxes of less than 1000 ft^2 (93 m^2)
   (b) Storage facilities of less than 1000 ft^2 (93 m^2) if enclosed with not less than 1-hour fire resistance–rated construction
   (c) Enclosed areas underneath grandstands that comply with 13.4.8.5

13.3.5.4 Where another provision of this chapter requires an automatic sprinkler system, the sprinkler system shall be installed in accordance with 9.7.1.1(1).

13.3.6 Corridors. (No requirements.)

13.4 Special Provisions.

13.4.1 Life Safety Evaluation.

13.4.1.1* Where a life safety evaluation is required by other provisions of the *Code*, it shall comply with all of the following:

(1) The life safety evaluation shall be performed by persons acceptable to the authority having jurisdiction.

$$A = 1 + \frac{\text{riser height} - 178}{125}$$

(3) Stairs not having a handrail within a 30 in. (760 mm) horizontal distance shall be 25 percent wider than otherwise calculated; that is, their width shall be multiplied by factor *B*, where *B* equals the following:

$$B = 1.25$$

(4) Ramps steeper than 1 in 10 slope used in ascent shall have their width increased by 10 percent; that is, their width shall be multiplied by factor *C*, where *C* equals the following:

$$C = 1.10$$

13.4.2.7 Where smoke-protected assembly seating conforms to the requirements of 13.4.2, for rows of seats served by aisles or doorways at both ends, the number of seats per row shall not exceed 100, and the clear width of not less than 12 in. (305 mm) for aisle accessways shall be increased by 0.3 in. (7.6 mm) for every additional seat beyond the number stipulated in Table 13.4.2.7; however, the minimum clear width shall not be required to exceed 22 in. (560 mm).

Table 13.4.2.7 Smoke-Protected Assembly Seating Aisle Accessways

	Number of Seats per Row Permitted to Have a Clear Width Aisle Accessway of Not Less than 12 in. (305 mm)	
Total Number of Seats in the Space	Aisle or Doorway at Both Ends of Row	Aisle or Doorway at One End of Row
<4,000	14	7
4,000–6,999	15	7
7,000–9,999	16	8
10,000–12,999	17	8
13,000–15,999	18	9
16,000–18,999	19	9
19,000–21,999	20	10
≥22,000	21	11

13.4.2.8 Where smoke-protected assembly seating conforms to the requirements of 13.4.2, for rows of seats served by an aisle or doorway at one end only, the aisle accessway clear width of not less than 12 in. (305 mm) shall be increased by 0.6 in. (15 mm) for every additional seat beyond the number stipulated in Table 13.4.2.7; however, the minimum clear width shall not be required to exceed 22 in. (560 mm).

13.4.2.9 Smoke-protected assembly seating conforming with the requirements of 13.4.2 shall be permitted to have a common path of travel of 50 ft (15 m) from any seat to a point where a person has a choice of two directions of egress travel.

13.4.2.10 Aisle accessways shall be permitted to serve as one or both of the required exit accesses addressed in 12.4.2.9, provided that the aisle accessway has a minimum width of 12 in. (305 mm) plus 0.3 in. (7.6 mm) for every additional seat over a total of 7 in a row.

13.4.2.11 Where smoke-protected assembly seating conforms to the requirements of 13.4.2, the dead ends in aisle stairs shall not exceed a distance of 21 rows, unless both of the following criteria are met:

(1) The seats served by the dead-end aisle are not more than 40 seats from another aisle.
(2) The 40-seat distance is measured along a row of seats having an aisle accessway with a clear width of not less than 12 in. (305 mm) plus 0.3 in. (7.6 mm) for each additional seat above 7 in the row.

13.4.2.12 Where smoke-protected assembly seating conforms to the requirements of 13.4.2, the travel distance from each seat to the nearest entrance to an egress vomitory or egress concourse shall not exceed 400 ft (122 m).

13.4.2.13 Where smoke-protected assembly seating conforms to the requirements of 13.4.2, the travel distance from the entrance to the vomitory or from the egress concourse to an approved egress stair, ramp, or walk at the building exterior shall not exceed 200 ft (61 m).

13.4.2.14 The travel distance requirements of 13.4.2.12 and 13.4.2.13 shall not apply to outdoor assembly seating facilities of Type I or Type II construction where all portions of the means of egress are essentially open to the outside.

13.4.3 Limited Access or Underground Buildings. Limited access or underground buildings shall comply with Section 11.7.

13.4.4 High-Rise Buildings. Existing high-rise buildings that house assembly occupancies in high-rise portions of the building shall have the highest level of the assembly occupancy and all levels below protected by an approved, supervised automatic sprinkler system in accordance with Section 9.7. *(See also 13.1.6.)*

13.4.5 Stages and Platforms. See 3.3.262 and 3.3.209.

13.4.5.1 Materials and Design.

13.4.5.1.1 Reserved.

13.4.5.1.2 Stage stairs shall be permitted to be of combustible materials, regardless of building construction type.

13.4.5.2 Platform Construction. (Reserved)

13.4.5.3 Stage Construction. (Reserved)

13.4.5.4 Accessory Rooms. (Reserved)

13.4.5.5 Ventilators. Regular stages in excess of 1000 ft^2 (93 m^2) and legitimate stages shall be provided with emergency ventilation to provide a means of removing smoke and combustion gases directly to the outside in the event of a fire, and such ventilation shall be achieved by one or a combination of the methods specified in 13.4.5.5.1 through 13.4.5.5.3.

13.4.5.5.1 Smoke Control.

13.4.5.5.1.1 A means complying with Section 9.3 shall be provided to maintain the smoke level at not less than 6 ft (1830 mm) above the highest level of assembly seating or above the top of the proscenium opening where a proscenium wall and opening protection are provided.

13.4.5.5.1.2 Reserved.

13.4.5.5.1.3 The smoke control system shall be activated independently by each of the following:

(1) Activation of the sprinkler system in the stage area
(2) Activation of smoke detectors over the stage area
(3) Activation by manually operated switch at an approved location

13.4.5.5.1.4 The emergency ventilation system shall be supplied by both normal and standby power.

13.4.5.5.1.5 The fan(s) power wiring and ducts shall be located and properly protected to ensure a minimum of 20 minutes of operation in the event of activation.

13.4.5.5.2 Roof Vents.

13.4.5.5.2.1 Two or more vents shall be located near the center of and above the highest part of the stage area.

13.4.5.5.2.2 The vents shall be raised above the roof and shall provide a net free vent area equal to 5 percent of the stage area.

13.4.5.5.2.3 Vents shall be constructed to open automatically by approved heat-activated devices, and supplemental means shall be provided for manual operation and periodic testing of the ventilator from the stage floor.

13.4.5.5.2.4 Vents shall be labeled.

13.4.5.5.2.5 Existing roof vents that are not labeled shall be permitted where they open by spring action or force of gravity sufficient to overcome the effects of neglect, rust, dirt, frost, snow, or expansion by heat or warping of the framework, and the following requirements also shall apply:

(1) Glass, if used in vents, shall be protected against falling onto the stage.
(2) A wire screen, if used under the glass, shall be placed so that, if clogged, it does not reduce the required venting area, interfere with the operating mechanism, or obstruct the distribution of water from an automatic sprinkler.
(3) Vents shall be arranged to open automatically by the use of fusible links.
(4) The fusible links and operating cable shall hold each door closed against a minimum 30 lb (133 N) counterforce that shall be exerted on each door through its entire arc of travel and for not less than 115 degrees.
(5) Vents shall be provided with manual control.
(6) Springs, where employed to actuate vent doors, shall be capable of maintaining full required tension.
(7) Springs shall not be stressed more than 50 percent of their rated capacity and shall not be located directly in the airstream nor exposed to the outside.
(8) A fusible link shall be placed in the cable control system on the underside of the vent at or above the roofline, or as approved by the building official.
(9) The fusible link shall be located so as not to be affected by the operation of an automatic sprinkler system.
(10) Remote, manual, or electric controls shall provide for both opening and closing of the vent doors for periodic testing and shall be located at a point on stage designated by the authority having jurisdiction.
(11) Where remote control vents are electrical, power failure shall not affect instant operation of the vent in the event of fire.
(12) Hand winches shall be permitted to be employed to facilitate operation of manually controlled vents.

13.4.5.5.3 Other Means. Approved, alternate means of removing smoke and combustion gases shall be permitted.

13.4.5.6 Proscenium Walls. (Reserved)

13.4.5.7 Proscenium Opening Protection.

13.4.5.7.1 On every legitimate stage, the main proscenium opening used for viewing performances shall be provided with proscenium opening protection as follows:

(1) The proscenium opening protection shall comply with 12.4.5.7.
(2) Asbestos shall be permitted in lieu of a listed fabric.
(3) Manual curtains of any size shall be permitted.

13.4.5.7.2 In lieu of the protection required by 13.4.5.7.1(1), all the following shall be provided:

(1) A noncombustible opaque fabric curtain shall be arranged so that it closes automatically.
(2) An automatic, fixed waterspray deluge system shall be located on the auditorium side of the proscenium opening and shall be arranged so that the entire face of the curtain will be wetted, and all of the following requirements also shall apply:
   (a) The system shall be activated by a combination of rate-of-rise and fixed-temperature detectors located on the ceiling of the stage.
   (b) Detectors shall be spaced in accordance with their listing.
   (c) The water supply shall be controlled by a deluge valve and shall be sufficient to keep the curtain completely wet for 30 minutes or until the valve is closed by fire department personnel.
(3) The curtain shall be automatically operated in case of fire by a combination of rate-of-rise and fixed-temperature detectors that also activates the deluge spray system.
(4) Stage sprinklers and vents shall be automatically operated by fusible elements in case of fire.
(5) Operation of the stage sprinkler system or spray deluge valve shall automatically activate the emergency ventilating system and close the curtain.
(6) The curtain, vents, and spray deluge system valve shall also be capable of manual operation.

13.4.5.7.3 Proscenium opening protection provided by other than a fire curtain in accordance with 12.4.5.7 *[see 13.4.5.7.1(1)]* shall activate upon automatic detection of a fire and upon manual activation.

13.4.5.8 Gridirons, Fly Galleries, and Pinrails. (Reserved)

13.4.5.9 Catwalks. The clear width of lighting and access catwalks and the means of egress from galleries and gridirons shall be not less than 22 in. (560 mm).

13.4.5.10 Fire Protection. Every stage shall be protected by an approved automatic sprinkler system in compliance with Section 9.7.

13.4.5.10.1 Protection shall be provided throughout the stage and in storerooms, workshops, permanent dressing rooms, and other accessory spaces contiguous to stages.

13.4.5.10.2 Sprinklers shall not be required for stages 1000 ft^2 (93 m^2) or less in area where both of the following criteria are met:

(1) Curtains, scenery, or other combustible hangings are not retractable vertically.
(2) Combustible hangings are limited to borders, legs, a single main curtain, and a single backdrop.

13.4.5.10.3 Sprinklers shall not be required under stage areas less than 48 in. (1220 mm) in clear height that are used exclusively for chair or table storage and lined on the inside with ⅝ in. (16 mm) Type X gypsum wallboard or the approved equivalent.

13.4.9 Folding and Telescopic Seating.

13.4.9.1 General.

13.4.9.1.1 Folding and telescopic seating shall comply with the provisions of this chapter as modified by 13.4.9.

13.4.9.1.2 Approved existing folding and telescopic seating shall be permitted to be continued to be used.

13.4.9.2 Seating.

13.4.9.2.1 The horizontal distance of seats, measured back-to-back, shall be not less than 22 in. (560 mm) for seats without backs, and all of the following requirements shall also apply:

(1) There shall be a space of not less than 12 in. (305 mm) between the back of each seat and the front of each seat immediately behind it.
(2) If seats are of the chair type, the 12 in. (305 mm) dimension shall be measured to the front edge of the rear seat in its normal unoccupied position.
(3) All measurements shall be taken between plumb lines.

13.4.9.2.2 The depth of footboards (footrests) and seat boards in folding and telescopic seating shall be not less than 9 in. (230 mm).

13.4.9.2.3 Where the same level is not used for both seat foundations and footrests, footrests independent of seats shall be provided.

13.4.9.2.4 Individual chair-type seats shall be permitted in folding and telescopic seating only if firmly secured in groups of not less than three.

13.4.9.2.5 The maximum number of seats permitted between the farthest seat in an aisle in folding and telescopic seating shall not exceed that shown in Table 13.4.8.2.5.

13.4.9.3 Guards and Railings.

13.4.9.3.1 Railings or guards not less than 42 in. (1065 mm) above the aisle surface or footrest, or not less than 36 in. (915 mm) vertically above the center of the seat or seat board surface, whichever is adjacent, shall be provided along those portions of the backs and ends of all folding and telescopic seating where the seats are more than 48 in. (1220 mm) above the floor or the finished ground level.

13.4.9.3.2 The requirement of 13.4.9.3.1 shall not apply where an adjacent wall or fence affords equivalent safeguard.

13.4.9.3.3 Where the front footrest of folding or telescopic seating is more than 24 in. (610 mm) above the floor, railings or guards not less than 33 in. (825 mm) above such footrests shall be provided.

13.4.9.3.4 The railings required by 13.4.9.3.3 shall be permitted to be not less than 26 in. (660 mm) high where the front row of seats includes backrests.

13.4.9.3.5 Cross aisles located within the seating area shall be provided with rails not less than 26 in. (660 mm) high along the front edge of the cross aisle.

13.4.9.3.6 The railings specified by 13.4.9.3.5 shall not be required where the backs of the seats in front of the cross aisle project 24 in. (610 mm) or more above the surface of the cross aisle.

13.4.9.3.7 Vertical openings between guardrails and footboards or seat boards shall be provided with intermediate construction so that a 4 in. (100 mm) diameter sphere cannot pass through the opening.

13.4.9.3.8 An opening between the seat board and footboard located more than 30 in. (760 mm) above the finished ground level shall be provided with intermediate construction so that a 4 in. (100 mm) diameter sphere cannot pass through the opening.

13.4.10 Airport Loading Walkways.

13.4.10.1 Airport loading walkways shall conform to NFPA 415, *Standard on Airport Terminal Buildings, Fueling Ramp Drainage, and Loading Walkways*, and the provisions of 13.4.10.2 and 13.4.10.3.

13.4.10.2 Doors in the egress path from the aircraft through the airport loading walkway into the airport terminal building shall meet both of the following criteria:

(1) They shall swing in the direction of egress from the aircraft.
(2) *They shall not be permitted to have delayed-egress locks.

13.4.10.3 Exit access shall be unimpeded from the airport loading walkway to the nonsecured public areas of the airport terminal building.

13.5 Building Services.

13.5.1 Utilities. Utilities shall comply with the provisions of Section 9.1.

13.5.2 Heating, Ventilating, and Air-Conditioning Equipment. Heating, ventilating, and air-conditioning equipment shall comply with the provisions of Section 9.2.

13.5.3 Elevators, Escalators, and Conveyors. Elevators, escalators, and conveyors shall comply with the provisions of Section 9.4.

13.5.4 Rubbish Chutes, Incinerators, and Laundry Chutes. Rubbish chutes, incinerators, and laundry chutes shall comply with the provisions of Section 9.5.

13.6 Reserved.

13.7 Operating Features.

13.7.1 Means of Egress Inspection.

13.7.1.1 The building owner or agent shall inspect the means of egress to ensure it is maintained free of obstructions, and correct any deficiencies found, prior to each opening of the building to the public.

13.7.1.2 The building owner or agent shall prepare and maintain records of the date and time of each inspection on approved forms, listing any deficiencies found and actions taken to correct them.

13.7.1.3 Inspection of Door Openings. Door openings shall be inspected in accordance with 7.2.1.15.

13.7.2 Special Provisions for Food Service Operations.

13.7.2.1 All devices in connection with the preparation of food shall be installed and operated to avoid hazard to the safety of occupants.

13.7.2.2 All devices in connection with the preparation of food shall be of an approved type and shall be installed in an approved manner.

13.7.2.3 Food preparation facilities shall be protected in accordance with 9.2.3 and shall not be required to have openings protected between food preparation areas and dining areas.

tanks shall not contain in excess of one-half their capacity or contain in excess of 10 gal (38 L) of fuel, whichever is less.

13.7.5.4.2 At least one battery cable shall be removed from the batteries used to start the vehicle engine, and the disconnected battery cable shall then be taped.

13.7.5.4.3 Batteries used to power auxiliary equipment shall be permitted to be kept in service.

13.7.5.4.4 Fueling or defueling of vehicles shall be prohibited.

13.7.5.4.5 Vehicles shall not be moved during exhibit hours.

13.7.5.5 Prohibited Materials.

13.7.5.5.1 The following items shall be prohibited within exhibit halls:

(1) Compressed flammable gases
(2) Flammable or combustible liquids
(3) Hazardous chemicals or materials
(4) Class II or greater lasers, blasting agents, and explosives

13.7.5.5.2 The authority having jurisdiction shall be permitted to allow the limited use of any items specified in 13.7.5.5.1 under special circumstances.

13.7.5.6 Alternatives. See Section 1.4.

13.7.6* Crowd Managers.

13.7.6.1 Assembly occupancies shall be provided with a minimum of one trained crowd manager or crowd manager supervisor. Where the occupant load exceeds 250, additional trained crowd managers or crowd manager supervisors shall be provided at a ratio of one crowd manager or crowd manager supervisor for every 250 occupants, unless otherwise permitted by one of the following:

(1) This requirement shall not apply to assembly occupancies used exclusively for religious worship with an occupant load not exceeding 2000.
(2) The ratio of trained crowd managers to occupants shall be permitted to be reduced where, in the opinion of the authority having jurisdiction, the existence of an approved, supervised automatic sprinkler system and the nature of the event warrant.

13.7.6.2 The crowd manager shall receive approved training in crowd management techniques.

13.7.7* Drills.

13.7.7.1 The employees or attendants of assembly occupancies shall be trained and drilled in the duties they are to perform in case of fire, panic, or other emergency to effect orderly exiting.

13.7.7.2 Employees or attendants of assembly occupancies shall be instructed in the proper use of portable fire extinguishers and other manual fire suppression equipment where provided.

13.7.7.3* In the following assembly occupancies, an audible announcement shall be made, or a projected image shall be shown, prior to the start of each program that notifies occupants of the location of the exits to be used in case of a fire or other emergency:

(1) Theaters
(2) Motion picture theaters
(3) Auditoriums
(4) Other similar assembly occupancies with occupant loads exceeding 300 where there are noncontinuous programs

13.7.7.4 The requirement of 13.7.7.3 shall not apply to assembly occupancies in schools where used for nonpublic events.

13.7.8 Smoking.

13.7.8.1 Smoking in assembly occupancies shall be regulated by the authority having jurisdiction.

13.7.8.2 In rooms or areas where smoking is prohibited, plainly visible signs shall be posted that read as follows:

NO SMOKING

13.7.8.3 No person shall smoke in prohibited areas that are so posted, unless permitted by the authority having jurisdiction under both of the following conditions:

(1) Smoking shall be permitted on a stage only where it is a necessary and rehearsed part of a performance.
(2) Smoking shall be permitted only where the smoker is a regular performing member of the cast.

13.7.8.4 Where smoking is permitted, suitable ashtrays or receptacles shall be provided in convenient locations.

13.7.9 Seating.

13.7.9.1 Secured Seating.

13.7.9.1.1 Seats in assembly occupancies accommodating more than 200 persons shall be securely fastened to the floor, except where fastened together in groups of not less than three and as permitted by 13.7.9.1.2 and 13.7.9.2.

13.7.9.1.2 Balcony and box seating areas that are separated from other areas by rails, guards, partial-height walls, or other physical barriers and have a maximum of 14 seats shall be exempt from the requirement of 13.7.9.1.1.

13.7.9.2 Unsecured Seating.

13.7.9.2.1 Seats not secured to the floor shall be permitted in restaurants, night clubs, and other occupancies where fastening seats to the floor might be impracticable.

13.7.9.2.2 Unsecured seats shall be permitted, provided that, in the area used for seating, excluding such areas as dance floors and stages, there is not more than one seat for each 15 ft^2 (1.4 m^2) of net floor area, and adequate aisles to reach exits are maintained at all times.

13.7.9.2.3 Seating diagrams shall be submitted for approval by the authority having jurisdiction to permit an increase in occupant load per 7.3.1.3.

13.7.9.3 Occupant Load Posting.

13.7.9.3.1 Every room constituting an assembly occupancy and not having fixed seats shall have the occupant load of the room posted in a conspicuous place near the main exit from the room.

13.7.9.3.2 Approved signs shall be maintained in a legible manner by the owner or authorized agent.

13.7.9.3.3 Signs shall be durable and shall indicate the number of occupants permitted for each room use.

13.7.10 Maintenance of Outdoor Grandstands.

13.7.10.1 The owner shall provide for not less than annual inspection and required maintenance of each outdoor grandstand to ensure safe conditions.

8.7.3 Flammable Liquids and Gases.

8.7.3.1 The storage and handling of flammable liquids or gases shall be in accordance with the following applicable standards:

(1) NFPA 30, *Flammable and Combustible Liquids Code*
(2) NFPA 54, *National Fuel Gas Code*
(3) NFPA 58, *Liquefied Petroleum Gas Code*

8.7.3.2* No storage or handling of flammable liquids or gases shall be permitted in any location where such storage would jeopardize egress from the structure, unless otherwise permitted by 8.7.3.1.

8.7.4 Laboratories.

8.7.4.1 Laboratories that use chemicals shall comply with NFPA 45, *Standard on Fire Protection for Laboratories Using Chemicals*, unless otherwise modified by other provisions of this *Code*.

8.7.4.2 Laboratories in health care occupancies and medical and dental offices shall comply with NFPA 99, *Health Care Facilities Code*.

8.7.5* Hyperbaric Facilities. All occupancies containing hyperbaric facilities shall comply with NFPA 99, *Health Care Facilities Code*, Chapter 20, unless otherwise modified by other provisions of this *Code*.

Chapter 9 Building Service and Fire Protection Equipment

9.1 Utilities.

9.1.1 Gas. Equipment using gas and related gas piping shall be in accordance with NFPA 54, *National Fuel Gas Code*, or NFPA 58, *Liquefied Petroleum Gas Code*, unless such installations are approved existing installations, which shall be permitted to be continued in service.

9.1.2 Electrical Systems. Electrical wiring and equipment shall be in accordance with *NFPA 70, National Electrical Code*, unless such installations are approved existing installations, which shall be permitted to be continued in service.

9.1.3 Emergency Generators and Standby Power Systems. Where required for compliance with this *Code*, emergency generators and standby power systems shall comply with 9.1.3.1 and 9.1.3.2.

9.1.3.1 Emergency generators and standby power systems shall be installed, tested, and maintained in accordance with NFPA 110, *Standard for Emergency and Standby Power Systems*.

9.1.3.2 New generator controllers shall be monitored by the fire alarm system, where provided, or at an attended location, for the following conditions:

(1) Generator running
(2) Generator fault
(3) Generator switch in nonautomatic position

9.1.4 Stored Electrical Energy Systems. Stored electrical energy systems shall be installed, tested, and maintained in accordance with NFPA 111, *Standard on Stored Electrical Energy Emergency and Standby Power Systems*.

9.2 Heating, Ventilating, and Air-Conditioning.

9.2.1 Air-Conditioning, Heating, Ventilating Ductwork, and Related Equipment. Air-conditioning, heating, ventilating ductwork, and related equipment shall be in accordance with NFPA 90A, *Standard for the Installation of Air-Conditioning and Ventilating Systems*, or NFPA 90B, *Standard for the Installation of Warm Air Heating and Air-Conditioning Systems*, as applicable, unless such installations are approved existing installations, which shall be permitted to be continued in service.

9.2.2 Ventilating or Heat-Producing Equipment. Ventilating or heat-producing equipment shall be in accordance with NFPA 91, *Standard for Exhaust Systems for Air Conveying of Vapors, Gases, Mists, and Noncombustible Particulate Solids*; NFPA 211, *Standard for Chimneys, Fireplaces, Vents, and Solid Fuel–Burning Appliances*; NFPA 31, *Standard for the Installation of Oil-Burning Equipment*; NFPA 54, *National Fuel Gas Code*; or *NFPA 70, National Electrical Code*, as applicable, unless such installations are approved existing installations, which shall be permitted to be continued in service.

9.2.3 Commercial Cooking Equipment. Commercial cooking equipment shall be in accordance with NFPA 96, *Standard for Ventilation Control and Fire Protection of Commercial Cooking Operations*, unless such installations are approved existing installations, which shall be permitted to be continued in service.

9.2.4 Ventilating Systems in Laboratories Using Chemicals. Ventilating systems in laboratories using chemicals shall be in accordance with NFPA 45, *Standard on Fire Protection for Laboratories Using Chemicals*, or NFPA 99, *Health Care Facilities Code*, as appropriate.

9.3 Smoke Control.

9.3.1 Where required by the provisions of another section of this *Code*, smoke control systems shall be installed, inspected, tested, and maintained in accordance with NFPA 92, *Standard for Smoke Control Systems*; NFPA 204, *Standard for Smoke and Heat Venting*; or nationally recognized standards, engineering guides, or recommended practices, as approved by the authority having jurisdiction.

9.3.2 The engineer of record shall clearly identify the intent of the system, the design method used, the appropriateness of the method used, and the required means of inspecting, testing, and maintaining the system.

9.3.3 Acceptance testing shall be performed by a special inspector in accordance with Section 9.9.

9.3.4 Smoke Control System Operation.

9.3.4.1 Floor- or zone-dependent smoke control systems shall be automatically activated by sprinkler waterflow or smoke detection systems.

9.3.4.2 Means for manual operation of smoke control systems shall be provided at an approved location.

9.4 Elevators, Escalators, and Conveyors.

9.4.1* General. An elevator, other than an elevator in accordance with 7.2.13, shall not be considered a component in a required means of egress but shall be permitted as a component in an accessible means of egress.

9.4.2 Code Compliance.

9.4.2.1 Except as modified herein, new elevators, escalators, dumbwaiters, and moving walks shall be in accordance with

Amusement Ride. A system that moves persons through a fixed course within a defined area for the purpose of amusement.

Amusement Ride Seat. A seat that is built-in or mechanically fastened to an *amusement ride* intended to be occupied by one or more passengers.

Area of Sport Activity. That portion of a room or *space* where the play or practice of a sport occurs.

Assembly Area. A *building* or *facility*, or portion thereof, used for the purpose of entertainment, educational or civic gatherings, or similar purposes. For the purposes of these requirements, *assembly areas* include, but are not limited to, classrooms, lecture halls, courtrooms, public meeting rooms, public hearing rooms, legislative chambers, motion picture houses, auditoria, theaters, playhouses, dinner theaters, concert halls, centers for the performing arts, amphitheaters, arenas, stadiums, grandstands, or convention centers.

Assistive Listening System (ALS). An amplification system utilizing transmitters, receivers, and coupling devices to bypass the acoustical *space* between a sound source and a listener by means of induction loop, radio frequency, infrared, or direct-wired equipment.

Boarding Pier. A portion of a pier where a boat is temporarily secured for the purpose of embarking or disembarking.

Boat Launch Ramp. A sloped surface designed for launching and retrieving trailered boats and other water craft to and from a body of water.

Boat Slip. That portion of a pier, main pier, finger pier, or float where a boat is moored for the purpose of berthing, embarking, or disembarking.

Building. Any structure used or intended for supporting or sheltering any use or occupancy.

Catch Pool. A pool or designated section of a pool used as a terminus for water slide flumes.

Characters. Letters, numbers, punctuation marks and typographic symbols.

Children's Use. Describes *spaces* and *elements* specifically designed for use primarily by people 12 years old and younger.

Circulation Path. An exterior or interior way of passage provided for pedestrian travel, including but not limited to, *walks*, hallways, courtyards, elevators, platform lifts, *ramps*, stairways, and landings.

Closed-Circuit Telephone. A telephone with a dedicated line such as a house phone, courtesy phone or phone that must be used to gain entry to a *facility*.

Common Use. Interior or exterior *circulation paths*, rooms, *spaces*, or *elements* that are not for *public use* and are made available for the shared use of two or more people.

Cross Slope. The slope that is perpendicular to the direction of travel (see *running slope*).

Curb Ramp. A short *ramp* cutting through a curb or built up to it.

Advisory 206.2.4 Spaces and Elements. Accessible routes must connect all spaces and elements required to be accessible including, but not limited to, raised areas and speaker platforms.

Advisory 206.2.4 Spaces and Elements Exception 1. The exception does not apply to areas that are likely to be used by members of the public who are not employees of the court such as jury areas, attorney areas, or witness stands.

206.2.5 Restaurants and Cafeterias. In restaurants and cafeterias, an *accessible* route shall be provided to all dining areas, including raised or sunken dining areas, and outdoor dining areas.

EXCEPTIONS: 1. In *buildings or facilities* not required to provide an *accessible* route between *stories*, an *accessible* route shall not be required to a *mezzanine* dining area where the *mezzanine* contains less than 25 percent of the total combined area for seating and dining and where the same decor and services are provided in the *accessible* area.

2. In *alterations*, an *accessible* route shall not be required to existing raised or sunken dining areas, or to all parts of existing outdoor dining areas where the same services and decor are provided in an *accessible space* usable by the public and not restricted to use by people with disabilities.

3. In sports *facilities,* tiered dining areas providing seating required to comply with 221 shall be required to have *accessible* routes serving at least 25 percent of the dining area provided that *accessible* routes serve seating complying with 221 and each tier is provided with the same services.

Advisory 206.2.5 Restaurants and Cafeterias Exception 2. Examples of "same services" include, but are not limited to, bar service, rooms having smoking and non-smoking sections, lotto and other table games, carry-out, and buffet service. Examples of "same decor" include, but are not limited to, seating at or near windows and railings with views, areas designed with a certain theme, party and banquet rooms, and rooms where entertainment is provided.

206.2.6 Performance Areas. Where a *circulation path* directly connects a performance area to an assembly seating area, an *accessible* route shall directly connect the assembly seating area with the performance area. An *accessible* route shall be provided from performance areas to ancillary areas or *facilities* used by performers unless exempted by 206.2.3 Exceptions 1 through 7.

206.2.7 Press Boxes. Press boxes in *assembly areas* shall be on an *accessible* route.

EXCEPTIONS: 1. An *accessible* route shall not be required to press boxes in bleachers that have points of entry at only one level provided that the aggregate area of all press boxes is 500 square feet (46 m^2) maximum.

2. An *accessible* route shall not be required to free-standing press boxes that are elevated above grade 12 feet (3660 mm) minimum provided that the aggregate area of all press boxes is 500 square feet (46 m^2) maximum.

208 Parking Spaces

208.1 General. Where parking *spaces* are provided, parking *spaces* shall be provided in accordance with 208.

EXCEPTION: Parking *spaces* used exclusively for buses, trucks, other delivery vehicles, law enforcement vehicles, or vehicular impound shall not be required to comply with 208 provided that lots accessed by the public are provided with a passenger loading zone complying with 503.

208.2 Minimum Number. Parking *spaces* complying with 502 shall be provided in accordance with Table 208.2 except as required by 208.2.1, 208.2.2, and 208.2.3. Where more than one parking *facility* is provided on a *site*, the number of *accessible spaces* provided on the *site* shall be calculated according to the number of *spaces* required for each parking *facility*.

Table 208.2 Parking Spaces

Total Number of Parking Spaces Provided in Parking Facility	Minimum Number of Required Accessible Parking Spaces
1 to 25	1
26 to 50	2
51 to 75	3
76 to 100	4
101 to 150	5
151 to 200	6
201 to 300	7
301 to 400	8
401 to 500	9
501 to 1000	2 percent of total
1001 and over	20, plus 1 for each 100, or fraction thereof, over 1000

Advisory 208.2 Minimum Number. The term "parking facility" is used Section 208.2 instead of the term "parking lot" so that it is clear that both parking lots and parking structures are required to comply with this section. The number of parking spaces required to be accessible is to be calculated separately for each parking facility; the required number is not to be based on the total number of parking spaces provided in all of the parking facilities provided on the site.

209.2.3 On-Street Bus Stops. On-street bus stops shall comply with 810.2 to the maximum extent practicable.

209.3 Medical Care and Long-Term Care Facilities. At least one passenger loading zone complying with 503 shall be provided at an *accessible entrance* to licensed medical care and licensed long-term care *facilities* where the period of stay exceeds twenty-four hours.

209.4 Valet Parking. Parking *facilities* that provide valet parking services shall provide at least one passenger loading zone complying with 503.

209.5 Mechanical Access Parking Garages. Mechanical access parking garages shall provide at least one passenger loading zone complying with 503 at vehicle drop-off and vehicle pick-up areas.

210 Stairways

210.1 General. Interior and exterior stairs that are part of a means of egress shall comply with 504.

EXCEPTIONS: 1. In detention and correctional *facilities*, stairs that are not located in *public use* areas shall not be required to comply with 504.

2. In *alterations*, stairs between levels that are connected by an *accessible* route shall not be required to comply with 504, except that handrails complying with 505 shall be provided when the stairs are *altered*.

3. In *assembly areas*, aisle stairs shall not be required to comply with 504.

4. Stairs that connect *play components* shall not be required to comply with 504.

> **Advisory 210.1 General.** Although these requirements do not mandate handrails on stairs that are not part of a means of egress, State or local building codes may require handrails or guards.

211 Drinking Fountains

211.1 General. Where drinking fountains are provided on an exterior *site*, on a floor, or within a secured area they shall be provided in accordance with 211.

EXCEPTION: In detention or correctional *facilities*, drinking fountains only serving holding or housing cells not required to comply with 232 shall not be required to comply with 211.

211.2 Minimum Number. No fewer than two drinking fountains shall be provided. One drinking fountain shall comply with 602.1 through 602.6 and one drinking fountain shall comply with 602.7.

EXCEPTION: Where a single drinking fountain complies with 602.1 through 602.6 and 602.7, it shall be permitted to be substituted for two separate drinking fountains.

211.3 More Than Minimum Number. Where more than the minimum number of drinking fountains specified in 211.2 are provided, 50 percent of the total number of drinking fountains provided shall comply with 602.1 through 602.6, and 50 percent of the total number of drinking fountains provided shall comply with 602.7.

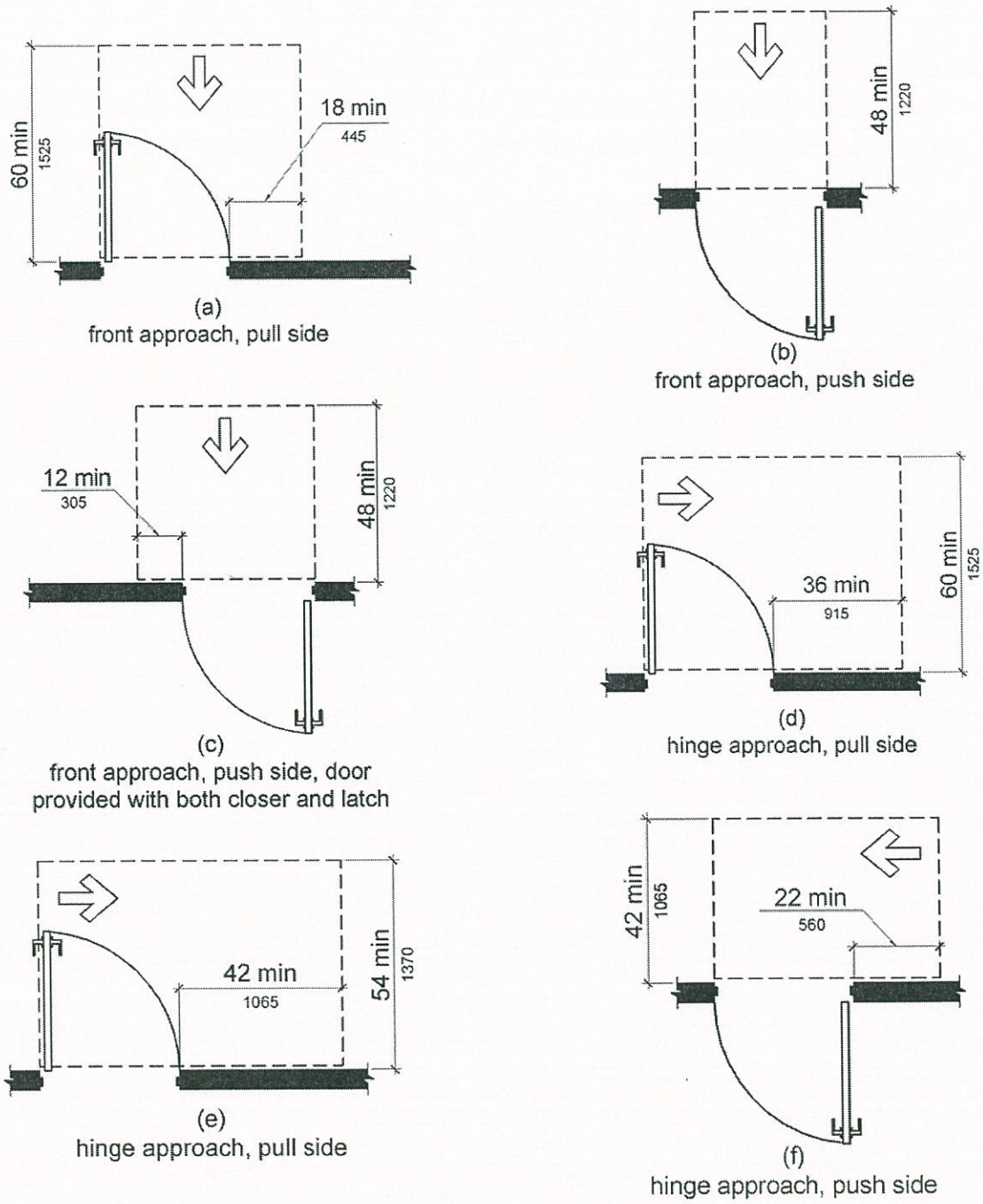

Figure 404.2.4.1
Maneuvering Clearances at Manual Swinging Doors and Gates

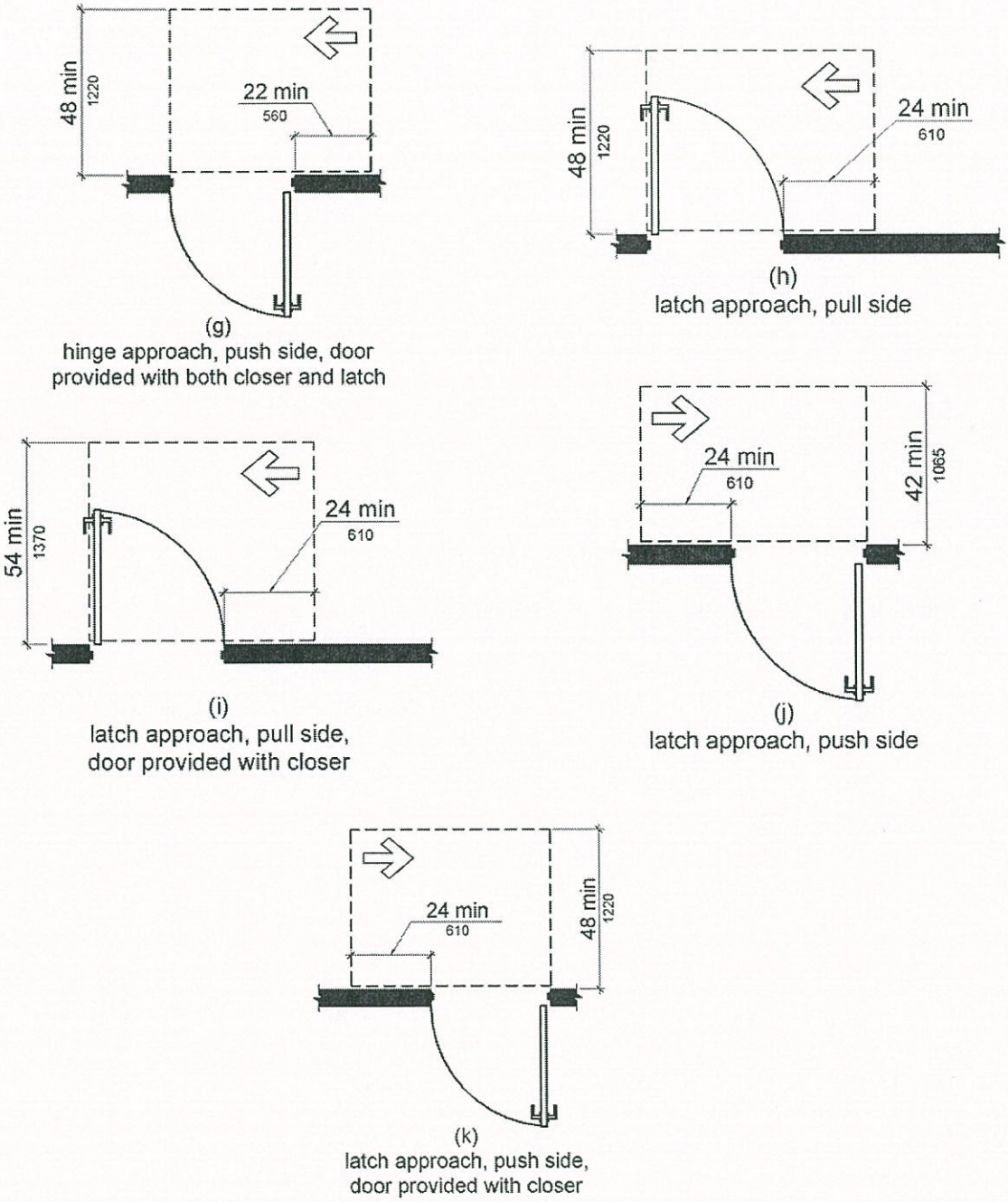

Figure 404.2.4.1
Maneuvering Clearances at Manual Swinging Doors and Gates

by reference, see "Referenced Standards" in Chapter 1). Low-energy and power-assisted doors shall comply with ANSI/BHMA A156.19 (1997 or 2002 edition) (incorporated by reference, see "Referenced Standards" in Chapter 1).

404.3.1 Clear Width. Doorways shall provide a clear opening of 32 inches (815 mm) minimum in power-on and power-off mode. The minimum clear width for automatic door systems in a doorway shall be based on the clear opening provided by all leaves in the open position.

404.3.2 Maneuvering Clearance. Clearances at power-assisted doors and gates shall comply with 404.2.4. Clearances at automatic doors and gates without standby power and serving an *accessible means of egress* shall comply with 404.2.4.

EXCEPTION: Where automatic doors and gates remain open in the power-off condition, compliance with 404.2.4 shall not be required.

404.3.3 Thresholds. Thresholds and changes in level at doorways shall comply with 404.2.5.

404.3.4 Doors in Series and Gates in Series. Doors in series and gates in series shall comply with 404.2.6.

404.3.5 Controls. Manually operated controls shall comply with 309. The clear floor *space* adjacent to the control shall be located beyond the arc of the door swing.

404.3.6 Break Out Opening. Where doors and gates without standby power are a part of a means of egress, the clear break out opening at swinging or sliding doors and gates shall be 32 inches (815 mm) minimum when operated in emergency mode.

EXCEPTION: Where manual swinging doors and gates comply with 404.2 and serve the same means of egress compliance with 404.3.6 shall not be required.

404.3.7 Revolving Doors, Revolving Gates, and Turnstiles. Revolving doors, revolving gates, and turnstiles shall not be part of an *accessible* route.

405 Ramps

405.1 General. *Ramps* on *accessible* routes shall comply with 405.

EXCEPTION: In *assembly areas*, aisle *ramps* adjacent to seating and not serving *elements* required to be on an *accessible* route shall not be required to comply with 405.

405.2 Slope. *Ramp* runs shall have a *running slope* not steeper than 1:12.

EXCEPTION: In existing *sites*, *buildings*, and *facilities*, *ramps* shall be permitted to have *running slopes* steeper than 1:12 complying with Table 405.2 where such slopes are necessary due to *space* limitations.

Table 405.2 Maximum Ramp Slope and Rise for Existing Sites, Buildings, and Facilities

Slope[1]	Maximum Rise
Steeper than 1:10 but not steeper than 1:8	3 inches (75 mm)
Steeper than 1:12 but not steeper than 1:10	6 inches (150 mm)

1. A slope steeper than 1:8 is prohibited.

Advisory 405.2 Slope. To accommodate the widest range of users, provide ramps with the least possible running slope and, wherever possible, accompany ramps with stairs for use by those individuals for whom distance presents a greater barrier than steps, e.g., people with heart disease or limited stamina.

405.3 Cross Slope. *Cross slope* of *ramp* runs shall not be steeper than 1:48.

Advisory 405.3 Cross Slope. Cross slope is the slope of the surface perpendicular to the direction of travel. Cross slope is measured the same way as slope is measured (i.e., the rise over the run).

405.4 Floor or Ground Surfaces. Floor or ground surfaces of *ramp* runs shall comply with 302. Changes in level other than the *running slope* and *cross slope* are not permitted on *ramp* runs.

405.5 Clear Width. The clear width of a *ramp* run and, where handrails are provided, the clear width between handrails shall be 36 inches (915 mm) minimum.

EXCEPTION: Within *employee work areas*, the required clear width of *ramps* that are a part of *common use circulation paths* shall be permitted to be decreased by *work area equipment* provided that the decrease is essential to the function of the work being performed.

405.6 Rise. The rise for any *ramp* run shall be 30 inches (760 mm) maximum.

405.7 Landings. *Ramps* shall have landings at the top and the bottom of each *ramp* run. Landings shall comply with 405.7.

Advisory 405.7 Landings. Ramps that do not have level landings at changes in direction can create a compound slope that will not meet the requirements of this document. Circular or curved ramps continually change direction. Curvilinear ramps with small radii also can create compound cross slopes and cannot, by their nature, meet the requirements for accessible routes. A level landing is needed at the accessible door to permit maneuvering and simultaneously door operation.

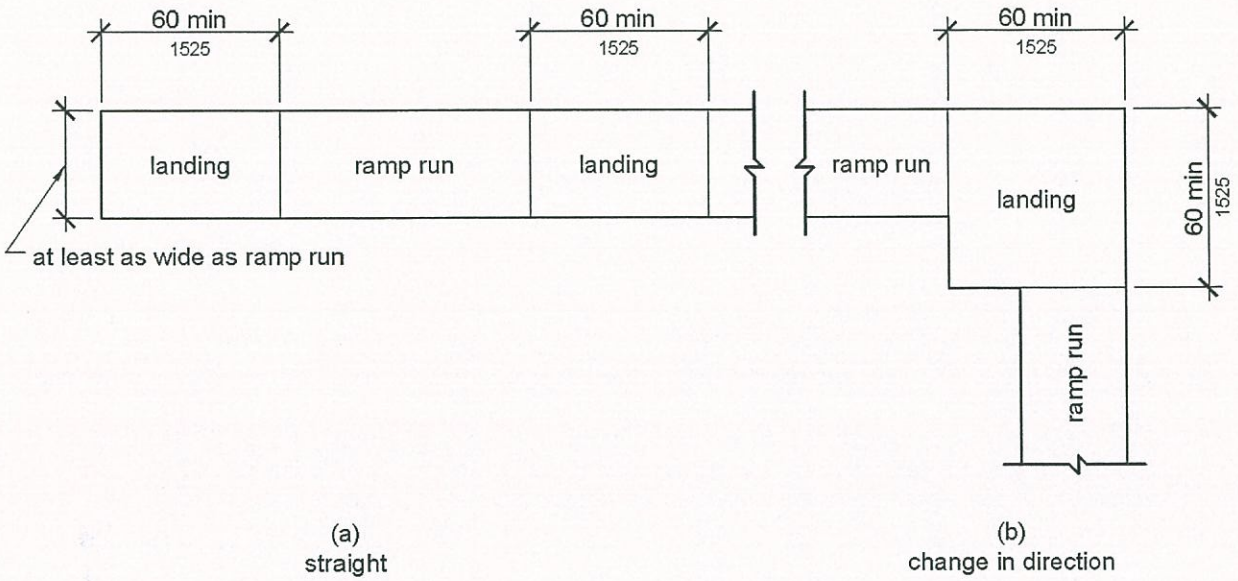

Figure 405.7
Ramp Landings

405.7.1 Slope. Landings shall comply with 302. Changes in level are not permitted.
EXCEPTION: Slopes not steeper than 1:48 shall be permitted.

405.7.2 Width. The landing clear width shall be at least as wide as the widest *ramp* run leading to the landing.

405.7.3 Length. The landing clear length shall be 60 inches (1525 mm) long minimum.

405.7.4 Change in Direction. *Ramps* that change direction between runs at landings shall have a clear landing 60 inches (1525 mm) minimum by 60 inches (1525 mm) minimum.

405.7.5 Doorways. Where doorways are located adjacent to a *ramp* landing, maneuvering clearances required by 404.2.4 and 404.3.2 shall be permitted to overlap the required landing area.

405.8 Handrails. *Ramp* runs with a rise greater than 6 inches (150 mm) shall have handrails complying with 505.
EXCEPTION: Within *employee work areas*, handrails shall not be required where *ramps* that are part of *common use circulation paths* are designed to permit the installation of handrails complying with 505. *Ramps* not subject to the exception to 405.5 shall be designed to maintain a 36 inch (915 mm) minimum clear width when handrails are installed.

405.9 Edge Protection. Edge protection complying with 405.9.1 or 405.9.2 shall be provided on each side of *ramp* runs and at each side of *ramp* landings.

Advisory 602.6 Water Flow. The purpose of requiring the drinking fountain spout to produce a flow of water 4 inches (100 mm) high minimum is so that a cup can be inserted under the flow of water to provide a drink of water for an individual who, because of a disability, would otherwise be incapable of using the drinking fountain.

602.7 Drinking Fountains for Standing Persons. Spout outlets of drinking fountains for standing persons shall be 38 inches (965 mm) minimum and 43 inches (1090 mm) maximum above the finish floor or ground.

603 Toilet and Bathing Rooms

603.1 General. Toilet and bathing rooms shall comply with 603.

603.2 Clearances. Clearances shall comply with 603.2.

603.2.1 Turning Space. Turning *space* complying with 304 shall be provided within the room.

603.2.2 Overlap. Required clear floor *spaces*, clearance at fixtures, and turning *space* shall be permitted to overlap.

603.2.3 Door Swing. Doors shall not swing into the clear floor *space* or clearance required for any fixture. Doors shall be permitted to swing into the required turning *space*.

EXCEPTIONS: 1. Doors to a toilet room or bathing room for a single occupant accessed only through a private office and not for *common use* or *public use* shall be permitted to swing into the clear floor *space* or clearance provided the swing of the door can be reversed to comply with 603.2.3.

2. Where the toilet room or bathing room is for individual use and a clear floor *space* complying with 305.3 is provided within the room beyond the arc of the door swing, doors shall be permitted to swing into the clear floor *space* or clearance required for any fixture.

Advisory 603.2.3 Door Swing Exception 1. At the time the door is installed, and if the door swing is reversed in the future, the door must meet all the requirements specified in 404. Additionally, the door swing cannot reduce the required width of an accessible route. Also, avoid violating other building or life safety codes when the door swing is reversed.

603.3 Mirrors. Mirrors located above lavatories or countertops shall be installed with the bottom edge of the reflecting surface 40 inches (1015 mm) maximum above the finish floor or ground. Mirrors not located above lavatories or countertops shall be installed with the bottom edge of the reflecting surface 35 inches (890 mm) maximum above the finish floor or ground.

Advisory 603.3 Mirrors. A single full-length mirror can accommodate a greater number of people, including children. In order for mirrors to be usable by people who are ambulatory and people who use wheelchairs, the top edge of mirrors should be 74 inches (1880 mm) minimum from the floor or ground.

603.4 Coat Hooks and Shelves. Coat hooks shall be located within one of the reach ranges specified in 308. Shelves shall be located 40 inches (1015 mm) minimum and 48 inches (1220 mm) maximum above the finish floor.

604 Water Closets and Toilet Compartments

604.1 General. Water closets and toilet compartments shall comply with 604.2 through 604.8.

EXCEPTION: Water closets and toilet compartments for *children's use* shall be permitted to comply with 604.9.

604.2 Location. The water closet shall be positioned with a wall or partition to the rear and to one side. The centerline of the water closet shall be 16 inches (405 mm) minimum to 18 inches (455 mm) maximum from the side wall or partition, except that the water closet shall be 17 inches (430 mm) minimum and 19 inches (485 mm) maximum from the side wall or partition in the ambulatory *accessible* toilet compartment specified in 604.8.2. Water closets shall be arranged for a left-hand or right-hand approach.

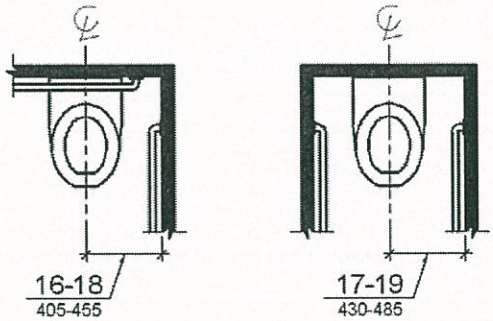

(a) wheelchair accessible water closets

(b) ambulatory accessible water closets

Figure 604.2
Water Closet Location

604.3 Clearance. Clearances around water closets and in toilet compartments shall comply with 604.3.

604.3.1 Size. Clearance around a water closet shall be 60 inches (1525 mm) minimum measured perpendicular from the side wall and 56 inches (1420 mm) minimum measured perpendicular from the rear wall.

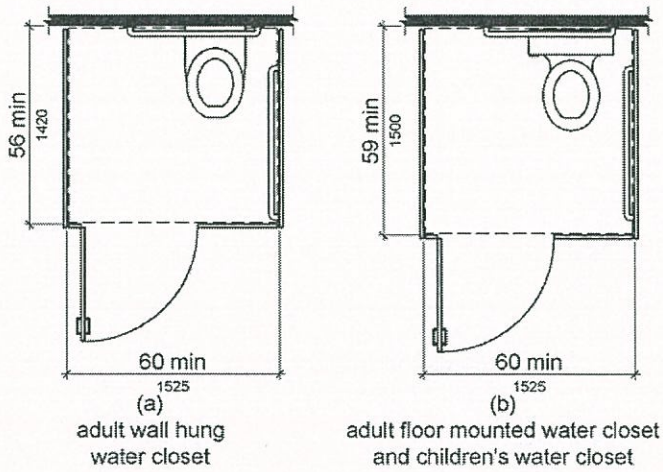

Figure 604.8.1.1
Size of Wheelchair Accessible Toilet Compartment

604.8.1.2 Doors. Toilet compartment doors, including door hardware, shall comply with 404 except that if the approach is to the latch side of the compartment door, clearance between the door side of the compartment and any obstruction shall be 42 inches (1065 mm) minimum. Doors shall be located in the front partition or in the side wall or partition farthest from the water closet. Where located in the front partition, the door opening shall be 4 inches (100 mm) maximum from the side wall or partition farthest from the water closet. Where located in the side wall or partition, the door opening shall be 4 inches (100 mm) maximum from the front partition. The door shall be self-closing. A door pull complying with 404.2.7 shall be placed on both sides of the door near the latch. Toilet compartment doors shall not swing into the minimum required compartment area.

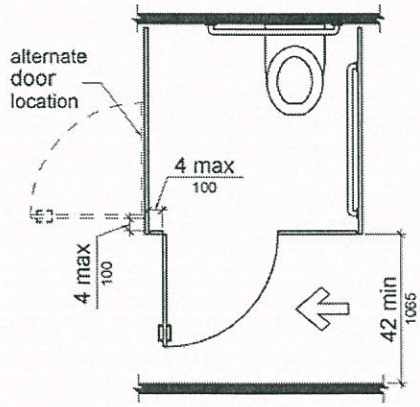

Figure 604.8.1.2
Wheelchair Accessible Toilet Compartment Doors

CHAPTER 7: COMMUNICATION ELEMENTS AND FEATURES

701 General

701.1 Scope. The provisions of Chapter 7 shall apply where required by Chapter 2 or where referenced by a requirement in this document.

702 Fire Alarm Systems

702.1 General. Fire alarm systems shall have permanently installed audible and visible alarms complying with NFPA 72 (1999 or 2002 edition) (incorporated by reference, see "Referenced Standards" in Chapter 1), except that the maximum allowable sound level of audible notification appliances complying with section 4-3.2.1 of NFPA 72 (1999 edition) shall have a sound level no more than 110 dB at the minimum hearing distance from the audible appliance. In addition, alarms in guest rooms required to provide communication features shall comply with sections 4-3 and 4-4 of NFPA 72 (1999 edition) or sections 7.4 and 7.5 of NFPA 72 (2002 edition).

EXCEPTION: Fire alarm systems in medical care *facilities* shall be permitted to be provided in accordance with industry practice.

703 Signs

703.1 General. Signs shall comply with 703. Where both visual and *tactile characters* are required, either one sign with both visual and *tactile characters*, or two separate signs, one with visual, and one with *tactile characters*, shall be provided.

703.2 Raised Characters. Raised *characters* shall comply with 703.2 and shall be duplicated in braille complying with 703.3. Raised *characters* shall be installed in accordance with 703.4.

> **Advisory 703.2 Raised Characters.** Signs that are designed to be read by touch should not have sharp or abrasive edges.

703.2.1 Depth. Raised *characters* shall be 1/32 inch (0.8 mm) minimum above their background.

703.2.2 Case. *Characters* shall be uppercase.

703.2.3 Style. *Characters* shall be sans serif. *Characters* shall not be italic, oblique, script, highly decorative, or of other unusual forms.

703.2.4 Character Proportions. *Characters* shall be selected from fonts where the width of the uppercase letter "O" is 55 percent minimum and 110 percent maximum of the height of the uppercase letter "I".

703.2.5 Character Height. *Character* height measured vertically from the baseline of the *character* shall be 5/8 inch (16 mm) minimum and 2 inches (51 mm) maximum based on the height of the uppercase letter "I".

704.4 TTYs. *TTY*s required at a public pay telephone shall be permanently affixed within, or adjacent to, the telephone enclosure. Where an acoustic coupler is used, the telephone cord shall be sufficiently long to allow connection of the *TTY* and the telephone receiver.

> **Advisory 704.4 TTYs.** Ensure that sufficient electrical service is available where TTYs are to be installed.

704.4.1 Height. When in use, the touch surface of *TTY* keypads shall be 34 inches (865 mm) minimum above the finish floor.

EXCEPTION: Where seats are provided, *TTYs* shall not be required to comply with 704.4.1.

> **Advisory 704.4.1 Height.** A telephone with a TTY installed underneath cannot also be a wheelchair accessible telephone because the required 34 inches (865 mm) minimum keypad height can causes the highest operable part of the telephone, usually the coin slot, to exceed the maximum permitted side and forward reach ranges. (See Section 308).
>
> **Advisory 704.4.1 Height Exception.** While seats are not required at TTYs, reading and typing at a TTY is more suited to sitting than standing. Facilities that often provide seats at TTY's include, but are not limited to, airports and other passenger terminals or stations, courts, art galleries, and convention centers.

704.5 TTY Shelf. Public pay telephones required to accommodate portable *TTYs* shall be equipped with a shelf and an electrical outlet within or adjacent to the telephone enclosure. The telephone handset shall be capable of being placed flush on the surface of the shelf. The shelf shall be capable of accommodating a *TTY* and shall have 6 inches (150 mm) minimum vertical clearance above the area where the *TTY* is to be placed.

705 Detectable Warnings

705.1 General. *Detectable warnings* shall consist of a surface of truncated domes and shall comply with 705.

705.1.1 Dome Size. Truncated domes in a *detectable warning* surface shall have a base diameter of 0.9 inch (23 mm) minimum and 1.4 inches (36 mm) maximum, a top diameter of 50 percent of the base diameter minimum to 65 percent of the base diameter maximum, and a height of 0.2 inch (5.1 mm).

705.1.2 Dome Spacing. Truncated domes in a *detectable warning* surface shall have a center-to-center spacing of 1.6 inches (41 mm) minimum and 2.4 inches (61 mm) maximum, and a base-to-base spacing of 0.65 inch (17 mm) minimum, measured between the most adjacent domes on a square grid.

705.1.3 Contrast. *Detectable warning* surfaces shall contrast visually with adjacent walking surfaces either light-on-dark, or dark-on-light.

Environmental Industrial Hygiene Occupational Safety

Diamond Environmental

3624 State Route 303 • Ravenna, Ohio 44266
Phone: (330) 422-0799 • Fax: (330) 422-0798

RECEIVED
JAN 22 2016
DeSALVO
CONSTRUCTION COMPANY

January 14, 2016

Mr. Joe DeSalvo
DeSalvo Construction
1491 West Liberty
Hubbard, Ohio 44425

RE: Asbestos Bulk Survey for Renovation/Demolition
- 52 E. Quarry St., Newton Falls, Ohio 44444
Diamond # 16-0001

Diamond Environmental was contacted to perform an asbestos bulk survey for a recreational building known as the Newton Falss Community Center located at 52 East Quarry Street in Newton Falls, Ohio in conjunction with its planned renovation or demolition. The building will be described as a single story office and open area and a two story high gymnasium. The office/open area has a walk-in attic. The office/open area has a walk-in and crawl space basement. The gymnasium has a flat rolled roof and the office/open area has a pitched asphalt shingled roof. The total square footage of the building is 15,300 square feet. The inspection and sampling was performed by **Mr. Keith R Bickel, CAHES # 31476** of Diamond Environmental on January 4, 2016.

Building Information – O.A.C. 3701-34-06

Owner: Newton Falls Community Center
52 E. Quarry Street
Newton Falls, Ohio 44444

Owner Representative : Mr. Joe DeSalvo
330-759-8145

Bulk Sampling

Mr. Bickel inspected all accessible building areas for both friable and non-friable suspect asbestos-containing materials (ACM). Bulk samples were collected using USEPA guidelines in a statiscally random manner and randomly distributed manner for the type of suspect material sampled accordance with 40 CFR Part 763.86. A random sampling strategy was designed and implemented with bulk samples of suspect ACM procured, excluding roofing material and intact inplace flooring material. Classification of the positively identified ACM has been made per the National Emission Standard for Hazardous Air Pollutants (NESHAPs).

General Limitations

- Diamond Environmental cannot guarantee that all asbestos material was located and identified in this survey.
- Asbestos materials not previously identified or quantified, may be encountered during renovation or demolition.
- During renovation additional quantities of asbestos material may be encountered that were previously inaccessible.
- During renovation or demolition, if new or additional quantities of suspect materials are encountered, the material is assumed asbestos containing, and all activities should cease until the material sampled.

Environmental Industrial Hygiene Occupational Safety

Diamond Environmental

3624 State Route 303 • Ravenna, Ohio 44266
Phone: (330) 422-0799 • Fax: (330) 422-0798

Building Notes:

Single story office/open area with a pitched asphalt shingled roof with attached two story high gymnasium with a flat rolled roof. Small walk-in basement in the northwest corner of the office/open area with crawl space basement throughout the rest of the office/open area. Exterior siding over transite shingles. The service garage in the southwest corner has both transite interior walls and ceiling. A second floor HVAC room on the north side of the gymnasium that can only be accessed by ladder has transite shingles on its exterior. The transite shingles were the original exterior of this room before the pitched roof in the office/open area was added. This material can only be accessed from the HVAC room. Aluminum windows with caulking and no glazing, except two windows in the the east center entrance area. No visual signs of asbestos insulation on or in basement boiler. Asbestos insulated pipe and asbestos insulation debris on the floor was noted in the walk-in basement, crawl space basement, and behind and underneath the stage area in the gymnasium. Underneath the carpet in the office/open area is 9"x9" floor tile.

Suspect Material Summary

MATERIAL	FOOTAGE (Approx.)
• Drywall system in Office/Open Area	> 5,000 Square
• Drywall system in Gymnasium	< 3,000 Square
• Lay-in Ceiling tile	> 5,000 Square
• Window glazing	< 5 Square
• Window caulking	< 200 Square
• Boiler insulation	< 10 Square
• 12x12 Floor tile on top of 9x9 floor tile	< 5,000 Square
• 9x9 Floor tile underneath carpet and 12x12 Floor tile	7,225 Square
• Plaster in basement	< 1,000 Square
• Roofing material	15,600 Square
• Asbestos transite siding	7,816 Square
• Asbestos pipe insulation and debris	300 Lineal

The following materials were sampled as suspect and identified as **non–asbestos** containing:

MATERIAL	FOOTAGE (Approx.)
• Drywall system in Office/Open Area	> 5,000 Square
• Drywall system in Gymnasium	< 3,000 Square
• Lay-in Ceiling tile	> 5,000 Square
• Window glazing	< 5 Square
• Window caulking	< 200 Square
• Boiler insulation	< 10 Square
• 12x12 Floor tile on top of 9x9 floor tile	< 5,000 Square

Environmental Industrial Hygiene Occupational Safety

Diamond Environmental

3624 State Route 303 • Ravenna, Ohio 44266
Phone: (330) 422-0799 • Fax: (330) 422-0798

The following materials were identified as **asbestos** containing and considered Category I – friable or Regulated Asbestos Containing Material (RACM).

MATERIAL	FOOTAGE (Approx.)
• Asbestos transite siding	7,816 Square
• Asbestos pipe insulation and debris	300 Lineal

The following is assumed **POSITIVE for asbestos** and considered Category I – nonfriable.

MATERIAL	SQUARE FOOTAGE (Approx.)
• Roofing material	15,600 Square

Analysis

The bulk samples were analyzed by polarized light microscopy for asbestos content at a NVLAP accredited laboratory utilizing the current " EPA Method for the Determination of Asbestos in Bulk Building Materials", EPA 600/R-93/116, July 1993. The United States Environmental Protection Agency requires all materials containing greater than one percent asbestos by weight to be considered asbestos containing materials. Analysis of all samples was conducted by analyzing each sample layer. If the basic analysis indicated that a trace amount of asbestos was present, point counting was done to verify the 1% or less result.

Summary of NESHAP Categories

Categories	Types	Material	Requirements for Building Demolition
Category I	Friable	All thermal, acoustical, and miscellaneous ACBM.	Must be removed prior to demolition.
	Non-friable	Packings, gaskets, resilient floor coverings, and asphalt roofing material.	Can be left in place if in good condition and will not become friable during demolition.
Category II	Non-friable	All non-friable material excluding Category I - Non-friable.	Can be left in place if in good condition and the probability is low that the material will become friable during demolition. **SHOULD BE REMOVED.** Material that has an above low probability of becoming friable during demolition must be removed.

Regulated asbestos-containing material (RACM) - is defined as friable asbestos containing material, Category I non-friable ACM that has become friable, Category I non-friable ACM that has been subjected to sanding, grinding, cutting, or abrading, Category II non-friable ACM that has a high probability of becoming or has become crumbled, pulverized, or reduced to powder by the forces expected to act on the material during demolition or renovation.

Environmental Industrial Hygiene Occupational Safety

Diamond Environmental

3624 State Route 303 • Ravenna, Ohio 44266
Phone: (330) 422-0799 • Fax: (330) 422-0798

Results

See asbestos bulk sampling sheet for results. See included map for sample locations.

Recommendations

Based on the results, it is recommended that if the building is demolished that the transite siding, and pipe insulating material be removed. If the building is renovated then the asbestos containing material that will have to be abated will depend on the areas that are to be renovated.

Demolition contractor shall follow Standard Demolition Practices and "Demolition Practices Under the Asbestos NESHAP" (http://www.epa.gov/region4/air/asbestos/demolish.htm). Building debris shall be adequately wet, and any intentional crushing of the floor tile and/or floor tiled material by heavy machinery, that makes the floor tile become friable, is prohibited.

Please contact the undersigned if you require any additional information. Thank you for consulting Diamond Environmental.

Sincerely,
Diamond Environmental, LLC

Keith R. Bickel, CHMM, REP, CAHES

Name of Certifying Officer: Keith R. Bickel
License Number: ES 31476

Signature:_____

Environmental Industrial Hygiene Occupational Safety

Diamond Environmental

3624 State Route 303 • Ravenna, Ohio 44266
Phone: (330) 422-0799 • Fax: (330) 422-0798

ASBESTOS BULK SAMPLING & ANALYSIS

Client: DeSalvo
Project: Asbestos NESHAP Survey
Diamond Work Order: 16-0001

Sampling Date: 1-4-16
Hygienist: Keith Bickel
Building: 52 E Quarry St.
Newton Falls, Ohio

Sample Number	Material	Functional Space	Analysis	
52-01	Drywall - Texture White	First Floor – WALL - Past Men's Restroom	Non-fibrous Particulate	100%
	- White Joint Compound		Non-fibrous Particulate	100%
	-White Tape		Cellulose fibers	100%
	-White Drywall		Cellulose fibers Non-fibrous Particulate	10% 90%
52-02	Drywall - Texture White	First Floor – WALL - Past Men's Restroom	Non-fibrous Particulate	100%
	- White Joint Compound		Non-fibrous Particulate	100%
	-White Tape		Cellulose fibers	100%
	-White Drywall		Cellulose fibers Non-fibrous Particulate	10% 90%
52-03	Drywall - Texture White	First Floor – WALL - Past Men's Restroom	Non-fibrous Particulate	100%
	- White Joint Compound		Non-fibrous Particulate	100%
	-White Tape		Fibrous Glass	100%
	-White Drywall		Cellulose fibers Non-fibrous Particulate	10% 90%
52-04	Drywall - Texture White	First Floor – WALL - Gymnasium	Non-fibrous Particulate	100%
	- White Joint Compound		Non-fibrous Particulate	100%
	-White Tape		Fibrous Glass	100%
	-White Drywall		Cellulose fibers Non-fibrous Particulate	10% 90%
52-05	Drywall - Texture White	First Floor – WALL - Gymnasium	Non-fibrous Particulate	100%
	- White Joint Compound		Non-fibrous Particulate	100%
	-White Tape		Cellulose fibers	100%
	-White Drywall		Cellulose fibers Non-fibrous Particulate	10% 90%
52-06	Drywall - Texture White	First Floor – WALL - Gymnasium	Non-fibrous Particulate	100%
	- White Joint Compound		Cellulose fibers Non-fibrous Particulate	1% 99%
	-White Tape		Cellulose fibers	100%
	-White Drywall		Cellulose fibers Non-fibrous Particulate	10% 90%

Environmental Industrial Hygiene Occupational Safety

Diamond Environmental

3624 State Route 303 • Ravenna, Ohio 44266
Phone: (330) 422-0799 • Fax: (330) 422-0798

ASBESTOS BULK SAMPLING & ANALYSIS

Client: DeSalvo
Project: Asbestos NESHAP Survey
Diamond Work Order: 16-0001

Sampling Date: 1-4-16
Hygienist: Keith Bickel
Building: 52 E Quarry St.
Newton Falls, Ohio

Sample Number	Material	Functional Space	Analysis	
52-07	Drywall - Texture White	First Floor – WALL - Gymnasium	Non-fibrous Particulate	100%
	- White Joint Compound		Cellulose fibers Non-fibrous Particulate	1% 99%
	-White Tape		Cellulose fibers	100%
	-White Drywall		Cellulose fibers Non-fibrous Particulate	10% 90%
52-08	Ceiling Tile - White	First Floor – CEILING - Main Front Area	Cellulose fibers Mineral Wool Non-fibrous Particulate	30% 30% 40%
52-09	Ceiling Tile - White	First Floor – CEILING - Southeast Room	Cellulose fibers Mineral Wool Non-fibrous Particulate	30% 30% 40%
52-10	Ceiling Tile - White	First Floor – CEILING - Northeast Room	Cellulose fibers Mineral Wool Non-fibrous Particulate	30% 30% 40%
52-11	Ceiling Tile - White	First Floor – CEILING - Northwest Room	Cellulose fibers Mineral Wool Non-fibrous Particulate	30% 30% 40%
52-12	Ceiling Tile - White	First Floor – CEILING - Main Front Area	Cellulose fibers Non-fibrous Particulate	95% 5%
52-13	Ceiling Tile - White	First Floor – CEILING - Main Front Area	Cellulose fibers Non-fibrous Particulate	95% 5%
52-14	12x12 Floor Tile - Gray	First Floor – FLOOR - Main Front Area	Non-fibrous Particulate	100%
	- Yellow Adhesive		Non-fibrous Particulate	100%
52-15	12x12 Floor Tile - Gray	First Floor – FLOOR - Main Front Area	Non-fibrous Particulate	100%
	- Yellow Adhesive		Non-fibrous Particulate	100%
52-16	12x12 Floor Tile - Gray	First Floor – FLOOR - Main Front Area	Non-fibrous Particulate	100%
	- Yellow Adhesive		Non-fibrous Particulate	100%
52-17	12x12 Floor Tile - Gray	First Floor – FLOOR - Main Front Area	Non-fibrous Particulate	100%
	- Yellow Adhesive		Non-fibrous Particulate	100%
52-18	12x12 Floor Tile - Gray	First Floor – FLOOR - West Hallway to Mens RR	Non-fibrous Particulate	100%
	- Black Adhesive		Non-fibrous Particulate	100%

Environmental Industrial Hygiene Occupational Safety

Diamond Environmental

3624 State Route 303 • Ravenna, Ohio 44266
Phone: (330) 422-0799 • Fax: (330) 422-0798

ASBESTOS BULK SAMPLING & ANALYSIS

Client: DeSalvo
Project: Asbestos NESHAP Survey
Diamond Work Order: 16-0001

Sampling Date: 1-4-16
Hygienist: Keith Bickel
Building: 52 E Quarry St.
Newton Falls, Ohio

Sample Number	Material	Functional Space	Analysis	
52-19	12x12 Floor Tile - Gray	First Floor – FLOOR - West Hallway to Mens RR	Non-fibrous Particulate	100%
	- Black Adhesive		Non-fibrous Particulate	100%
52-20	9x9 Floor Tile - Gray	First Floor – FLOOR - Main Front Area Closet	**Chrysotile Asbestos** Non-fibrous Particulate	**3%** 97%
	- Black Adhesive		**Chrysotile Asbestos** Non-fibrous Particulate	**2%** 98%
52-21	9x9 Floor Tile - Gray	First Floor – FLOOR - Stairwell to Basement	**Chrysotile Asbestos** Non-fibrous Particulate	**3%** 97%
	- Black Adhesive		**Chrysotile Asbestos** Non-fibrous Particulate	**2%** 98%
52-22	9x9 Floor Tile - Gray	First Floor – FLOOR - Stage Room	**Chrysotile Asbestos** Non-fibrous Particulate	**4%** 96%
	- Black Adhesive		**Chrysotile Asbestos** Non-fibrous Particulate	**2%** 98%
52-23	9x9 Floor Tile - Gray	First Floor – FLOOR - Stairwell to Basement	**Chrysotile Asbestos** Non-fibrous Particulate	**4%** 96%
	- Black Adhesive		**Chrysotile Asbestos** Non-fibrous Particulate	**2%** 98%
52-24	Glazing - White	First Floor – WINDOW - East Window	Non-fibrous Particulate	100%
52-25	Glazing - White	First Floor – WINDOW - East Window	Non-fibrous Particulate	100%
52-26	Caulking - White	First Floor – WINDOW - Northeast Window	Non-fibrous Particulate	100%
52-27	Caulking - White	First Floor – WINDOW - North Window	Non-fibrous Particulate	100%
52-28	Transite - Gray	Mezzanine – WALL - Ext Inside Patched Roof	**Chrysotile Asbestos** Non-fibrous Particulate	**20%** 80%
52-29	Plaster - Gray	Basement – CEILING - Open Area	Cellulose fibers Non-fibrous Particulate	2% 98%
52-30	Plaster - Gray	Basement – CEILING - Open Area	Cellulose fibers Non-fibrous Particulate	2% 98%
52-31	Plaster - Gray	Basement – CEILING - Open Area	Cellulose fibers Non-fibrous Particulate	2% 98%
52-32	Boiler Insulation - Red	Basement - Open Area	Non-fibrous Particulate	100%
52-33	Boiler Insulation - Red	Basement - Open Area	Non-fibrous Particulate	100%

Environmental Industrial Hygiene Occupational Safety

Diamond Environmental

3624 State Route 303 • Ravenna, Ohio 44266
Phone: (330) 422-0799 • Fax: (330) 422-0798

ASBESTOS BULK SAMPLING & ANALYSIS

Client: DeSalvo
Project: Asbestos NESHAP Survey
Diamond Work Order: 16-0001

Sampling Date: 1-4-16
Hygienist: Keith Bickel
Building: 52 E Quarry St.
Newton Falls, Ohio

Sample Number	Material	Functional Space	Analysis	
52-34	Aerosol Wrap - Gray	Basement - Open Area	**Chrysotile Asbestos** Non-fibrous Particulate	**50%** 50%
52-35	Transite - Gray	Garage	**Chrysotile Asbestos** Non-fibrous Particulate	**15%** 85%

Analytical Services

Client: KEITH BICKEL
DIAMOND ENVIRONMENTAL
3624 STATE ROUTE 303
RAVENNA OH 44266

Report #: 0116013
Date of Receipt: 01/06/2016
Report Date: 01/07/2016
Date of Analysis: 01/07/2016

Project: 52 E QUARRY ST, NEWTON FALLS
Project-ID: 16-0001

Client #	Sample Location	Material Description	Detection	Composition	
52-01	1ST FLOOR WALL ROOM PAST MENS RR	LAYER 1 Texture, White, Non-homogeneous, Chalky, Non-Friable	None Detected	Non-Fibrous Material	100%
		LAYER 2 Joint Compound, White, Non-homogeneous, Chalky, Non-Friable	None Detected	Non-Fibrous Material	100%
		LAYER 3 Tape, White, Non-homogeneous, Fibrous, Non-Friable	None Detected	Cellulose Fiber	100%
		LAYER 4 Drywall, White, Non-homogeneous, Chalky-Fibrous, Non-Friable	None Detected	Cellulose Fiber Non-Fibrous Material	10% 90%
52-02	1ST FLOOR WALL ROOM PAST MENS RR	LAYER 1 Texture, White, Non-homogeneous, Chalky, Non-Friable	None Detected	Non-Fibrous Material	100%
		LAYER 2 Joint Compound, White, Non-homogeneous, Chalky, Non-Friable	None Detected	Non-Fibrous Material	100%
		LAYER 3 Tape, White, Non-homogeneous, Fibrous, Non-Friable	None Detected	Cellulose Fiber	100%
		LAYER 4 Drywall, White, Non-homogeneous, Chalky-Fibrous, Non-Friable	None Detected	Cellulose Fiber Non-Fibrous Material	10% 90%

Analytical Services

Client: KEITH BICKEL
DIAMOND ENVIRONMENTAL
3624 STATE ROUTE 303
RAVENNA OH 44266

Report #: 0116013
Date of Receipt: 01/06/2016
Report Date: 01/07/2016
Date of Analysis: 01/07/2016

Project: 52 E QUARRY ST, NEWTON FALLS
Project-ID: 16-0001

Client #	Sample Location	Material Description	Detection	Composition	
52-03	1ST FLOOR WALL ROOM PAST MENS RR	LAYER 1 Texture, White, Non-homogeneous, Chalky, Non-Friable	None Detected	Non-Fibrous Material	100%
		LAYER 2 Joint Compound, White, Non-homogeneous, Chalky, Non-Friable	None Detected	Non-Fibrous Material	100%
		LAYER 3 Tape, White, Non-homogeneous, Fibrous, Non-Friable	None Detected	Fibrous Glass	100%
		LAYER 4 Drywall, White, Non-homogeneous, Chalky-Fibrous, Non-Friable	None Detected	Cellulose Fiber Non-Fibrous Material	10% 90%
52-04	1ST FLOOR WALL GYMNASIUM	LAYER 1 Texture, White, Non-homogeneous, Chalky, Non-Friable	None Detected	Non-Fibrous Material	100%
		LAYER 2 Joint Compound, White, Non-homogeneous, Chalky, Non-Friable	None Detected	Non-Fibrous Material	100%
		LAYER 3 Tape, White, Non-homogeneous, Fibrous, Non-Friable	None Detected	Fibrous Glass	100%
		LAYER 4 Drywall, White, Non-homogeneous, Chalky-Fibrous, Non-Friable	None Detected	Cellulose Fiber Non-Fibrous Material	10% 90%

Analytical Services

Client: KEITH BICKEL
DIAMOND ENVIRONMENTAL
3624 STATE ROUTE 303
RAVENNA OH 44266

Report #: 0116013
Date of Receipt: 01/06/2016
Report Date: 01/07/2016
Date of Analysis: 01/07/2016

Project: 52 E QUARRY ST, NEWTON FALLS
Project-ID: 16-0001

Client #	Sample Location	Material Description	Detection	Composition	
52-05	1ST FLOOR WALL GYMNASIUM	LAYER 1 Texture, White, Non-homogeneous, Chalky, Non-Friable	None Detected	Non-Fibrous Material	100%
		LAYER 2 Joint Compound, White, Non-homogeneous, Chalky, Non-Friable	None Detected	Non-Fibrous Material	100%
		LAYER 3 Tape, White, Non-homogeneous, Fibrous, Non-Friable	None Detected	Cellulose Fiber	100%
		LAYER 4 Drywall, White, Non-homogeneous, Chalky-Fibrous, Non-Friable	None Detected	Cellulose Fiber Non-Fibrous Material	10% 90%
52-06	1ST FLOOR WALL GYMNASIUM	LAYER 1 Texture, White, Non-homogeneous, Chalky, Non-Friable	None Detected	Non-Fibrous Material	100%
		LAYER 2 Joint Compound, White, Non-homogeneous, Chalky, Non-Friable	None Detected	Cellulose Fiber Non-Fibrous Material	1% 99%
		LAYER 3 Tape, White, Non-homogeneous, Fibrous, Non-Friable	None Detected	Cellulose Fiber	100%
		LAYER 4 Drywall, White, Non-homogeneous, Chalky-Fibrous, Non-Friable	None Detected	Cellulose Fiber Non-Fibrous Material	10% 90%

ANALYTICAL SERVICES
2563 DIANE AVE, PALM BAY, FLORIDA 32909
Phone: (321) 837-9837 Fax: (321) 728-0728
NVLAP CODE 200670-0

Analytical Services

Client: KEITH BICKEL
DIAMOND ENVIRONMENTAL
3624 STATE ROUTE 303
RAVENNA OH 44266

Report #: 0116013
Date of Receipt: 01/06/2016
Report Date: 01/07/2016
Date of Analysis: 01/07/2016

Project: 52 E QUARRY ST, NEWTON FALLS
Project-ID: 16-0001

Client #	Sample Location	Material Description	Detection	Composition	
52-07	1ST FLOOR WALL GYMNASIUM	LAYER 1 Texture, White, Non-homogeneous, Chalky, Non-Friable	None Detected	Non-Fibrous Material	100%
		LAYER 2 Joint Compound, White, Non-homogeneous, Chalky, Non-Friable	None Detected	Cellulose Fiber Non-Fibrous Material	1% 99%
		LAYER 3 Tape, White, Non-homogeneous, Fibrous, Non-Friable	None Detected	Cellulose Fiber	100%
		LAYER 4 Drywall, White, Non-homogeneous, Chalky-Fibrous, Non-Friable	None Detected	Cellulose Fiber Non-Fibrous Material	10% 90%
52-08	1ST FLOOR MAIN FRONT AREA	Ceiling Tile, White, Non-homogeneous, Fibrous, Friable	None Detected	Cellulose Fiber Mineral Wool Non-Fibrous Material	30% 30% 40%
52-09	1ST FLOOR SE ROOM	Ceiling Tile, White, Non-homogeneous, Fibrous, Friable	None Detected	Cellulose Fiber Mineral Wool Non-Fibrous Material	30% 30% 40%
52-10	1ST FLOOR NE ROOM	Ceiling Tile, White, Non-homogeneous, Fibrous, Friable	None Detected	Cellulose Fiber Mineral Wool Non-Fibrous Material	30% 30% 40%
52-11	1ST FLOOR NW ROOM	Ceiling Tile, White, Non-homogeneous, Fibrous, Friable	None Detected	Cellulose Fiber Mineral Wool Non-Fibrous Material	30% 30% 40%

Analytical Services

Client: KEITH BICKEL
DIAMOND ENVIRONMENTAL
3624 STATE ROUTE 303
RAVENNA OH 44266

Report #: 0116013
Date of Receipt: 01/06/2016
Report Date: 01/07/2016
Date of Analysis: 01/07/2016

Project: 52 E QUARRY ST, NEWTON FALLS
Project-ID: 16-0001

Client #	Sample Location	Material Description	Detection	Composition	
52-12	1ST FLOOR MAIN FRONT AREA	Ceiling Tile, White, Non-homogeneous, Fibrous, Friable	None Detected	Cellulose Fiber Non-Fibrous Material	95% 5%
52-13	1ST FLOOR MAIN FRONT AREA	Ceiling Tile, White, Non-homogeneous, Fibrous, Friable	None Detected	Cellulose Fiber Non-Fibrous Material	95% 5%
52-14	1ST FLOOR MAIN FRONT AREA	LAYER 1 12x12 Floor Tile, Gray, Non-homogeneous, Fine Grained, Non-Friable	None Detected	Non-Fibrous Material	100%
		LAYER 2 Adhesive, Yellow, Non-homogeneous, Resinous, Non-Friable	None Detected	Non-Fibrous Material	100%
52-15	1ST FLOOR MAIN FRONT AREA	LAYER 1 12x12 Floor Tile, Gray, Non-homogeneous, Fine Grained, Non-Friable	None Detected	Non-Fibrous Material	100%
		LAYER 2 Adhesive, Yellow, Non-homogeneous, Resinous, Non-Friable	None Detected	Non-Fibrous Material	100%
52-16	1ST FLOOR MAIN FRONT AREA	LAYER 1 12x12 Floor Tile, Gray, Non-homogeneous, Fine Grained, Non-Friable	None Detected	Non-Fibrous Material	100%
		LAYER 2 Adhesive, Yellow, Non-homogeneous, Resinous, Non-Friable	None Detected	Non-Fibrous Material	100%

Analytical Services

Client: KEITH BICKEL
DIAMOND ENVIRONMENTAL
3624 STATE ROUTE 303
RAVENNA OH 44266

Report #: 0116013
Date of Receipt: 01/06/2016
Report Date: 01/07/2016
Date of Analysis: 01/07/2016

Project: 52 E QUARRY ST, NEWTON FALLS
Project-ID: 16-0001

Client #	Sample Location	Material Description	Detection		Composition	
52-17	1ST FLOOR MAIN FRONT AREA	LAYER 1 12x12 Floor Tile, Gray, Non-homogeneous, Fine Grained, Non-Friable	None Detected		Non-Fibrous Material	100%
		LAYER 2 Adhesive, Yellow, Non-homogeneous, Resinous, Non-Friable	None Detected		Non-Fibrous Material	100%
52-18	1ST FLOOR W HALL TO MALE RR	LAYER 1 12x12 Floor Tile, Gray, Non-homogeneous, Fine Grained, Non-Friable	None Detected		Non-Fibrous Material	100%
		LAYER 2 Adhesive, Black, Non-homogeneous, Resinous, Non-Friable	None Detected		Non-Fibrous Material	100%
52-19	1ST FLOOR W HALL TO MALE RR	LAYER 1 12x12 Floor Tile, Gray, Non-homogeneous, Fine Grained, Non-Friable	None Detected		Non-Fibrous Material	100%
		LAYER 2 Adhesive, Black, Non-homogeneous, Resinous, Non-Friable	None Detected		Non-Fibrous Material	100%
52-20	1ST FLOOR MAIN FRONT AREA CLOSET	LAYER 1 9x9 Floor Tile, Black, Non-homogeneous, Fine Grained, Non-Friable	Chrysotile	3%	Non-Fibrous Material	97%
		LAYER 2 Adhesive, Black, Non-homogeneous, Resinous, Non-Friable	Chrysotile	2%	Non-Fibrous Material	98%

Analytical Services

Client: KEITH BICKEL
DIAMOND ENVIRONMENTAL
3624 STATE ROUTE 303
RAVENNA OH 44266

Report #: 0116013
Date of Receipt: 01/06/2016
Report Date: 01/07/2016
Date of Analysis: 01/07/2016

Project: 52 E QUARRY ST, NEWTON FALLS
Project-ID: 16-0001

Client #	Sample Location	Material Description	Detection		Composition	
52-21	1ST FLOOR STAIRWELL TO BASEMENT	LAYER 1 9x9 Floor Tile, Black, Non-homogeneous, Fine Grained, Non-Friable	Chrysotile	3%	Non-Fibrous Material	97%
		LAYER 2 Adhesive, Black, Non-homogeneous, Resinous, Non-Friable	Chrysotile	2%	Non-Fibrous Material	98%
52-22	1ST FLOOR STAGE ROOM	LAYER 1 9x9 Floor Tile, Dk Brown, Non-homogeneous, Fine Grained, Non-Friable	Chrysotile	4%	Non-Fibrous Material	96%
		LAYER 2 Adhesive, Black, Non-homogeneous, Resinous, Non-Friable	Chrysotile	2%	Non-Fibrous Material	98%
52-23	1ST FLOOR STAGE ROOM	LAYER 1 9x9 Floor Tile, Dk Brown, Non-homogeneous, Fine Grained, Non-Friable	Chrysotile	4%	Non-Fibrous Material	96%
		LAYER 2 Adhesive, Black, Non-homogeneous, Resinous, Non-Friable	Chrysotile	2%	Non-Fibrous Material	98%
52-24	1ST FLOOR E WINDOW	Glazing, White, Non-homogeneous, Chalky, Non-Friable	None Detected		Non-Fibrous Material	100%
52-25	1ST FLOOR E WINDOW	Glazing, White, Non-homogeneous, Chalky, Non-Friable	None Detected		Non-Fibrous Material	100%

Analytical Services

Client: KEITH BICKEL
DIAMOND ENVIRONMENTAL
3624 STATE ROUTE 303
RAVENNA OH 44266

Report #: 0116013
Date of Receipt: 01/06/2016
Report Date: 01/07/2016
Date of Analysis: 01/07/2016

Project: 52 E QUARRY ST, NEWTON FALLS
Project-ID: 16-0001

Client #	Sample Location	Material Description	Detection	Composition	
52-26	1ST FLOOR NE WINDOW	Caulking, White, Non-homogeneous, Rubbery, Non-Friable	None Detected	Non-Fibrous Material	100%
52-27	1ST FLOOR N WINDOW	Caulking, White, Non-homogeneous, Rubbery, Non-Friable	None Detected	Non-Fibrous Material	100%
52-28	MEZZANINE EXT INSIDE PATCHED ROOF	Transite, Gray, Non-homogeneous, Chalky-Fibrous, Non-Friable	Chrysotile 20%	Non-Fibrous Material	80%
52-29	BASEMENT	Plaster, Gray, Non-homogeneous, Granular, Non-Friable	None Detected	Cellulose Fiber Non-Fibrous Material	2% 98%
52-30	BASEMENT	Plaster, Gray, Non-homogeneous, Granular, Non-Friable	None Detected	Cellulose Fiber Non-Fibrous Material	2% 98%
52-31	BASEMENT	Plaster, Gray, Non-homogeneous, Granular, Non-Friable	None Detected	Cellulose Fiber Non-Fibrous Material	2% 98%
52-32	BASEMENT	Boiler Insulation, Red, Non-homogeneous, Chalky, Non-Friable	None Detected	Non-Fibrous Material	100%
52-33	BASEMENT	Boiler Insulation, Red, Non-homogeneous, Chalky, Non-Friable	None Detected	Non-Fibrous Material	100%

Analytical Services

Client:	KEITH BICKEL DIAMOND ENVIRONMENTAL 3624 STATE ROUTE 303 RAVENNA OH 44266	Report #: Date of Receipt: Report Date: Date of Analysis:	0116013 01/06/2016 01/07/2016 01/07/2016

Project: 52 E QUARRY ST, NEWTON FALLS
Project-ID: 16-0001

Client #	Sample Location	Material Description	Detection		Composition	
52-34	BASEMENT	Aerosol Wrap, Gray, Homogeneous, Fibrous, Friable	Chrysotile	50%	Cellulose Fiber	50%
52-35	GARAGE	Transite, Gray, Non-homogeneous, Chalky-Fibrous, Non-Friable	Chrysotile	15%	Non-Fibrous Material	85%

ASBESTOS TYPES:

Chrysotile, Crocidolite, Anthophyllite, Tremolite, Amosite, Actinolite

The samples listed above were suspect of containing asbestos. A result of "Non Detect" means a thorough search using appropriate techniques was conducted and no type of asbestos was discovered. Samples submitted to this facility will be disposed of unless the client requests the samples be returned. Reports will be archived for a period of no more than 3 years. The analysis performed is in accordance with EPA 600/M4-82-020 and EPA 600/R-93/116. Test results apply only to the samples submitted. It is not our policy to distribute the customer's information without the written consent of the customer. The test report shall not be reproduced except in full, without the written approval of the laboratory. This report may not be used by the above client to claim product certification, approval or endorsement by NIST, National Voluntary Laboratory Accreditation Program or the Federal Government.

Shawn Kearney
Laboratory Director / Analyst

Angela Kearney
President

52 E. Quarry St.
Newton Falls, Ohio

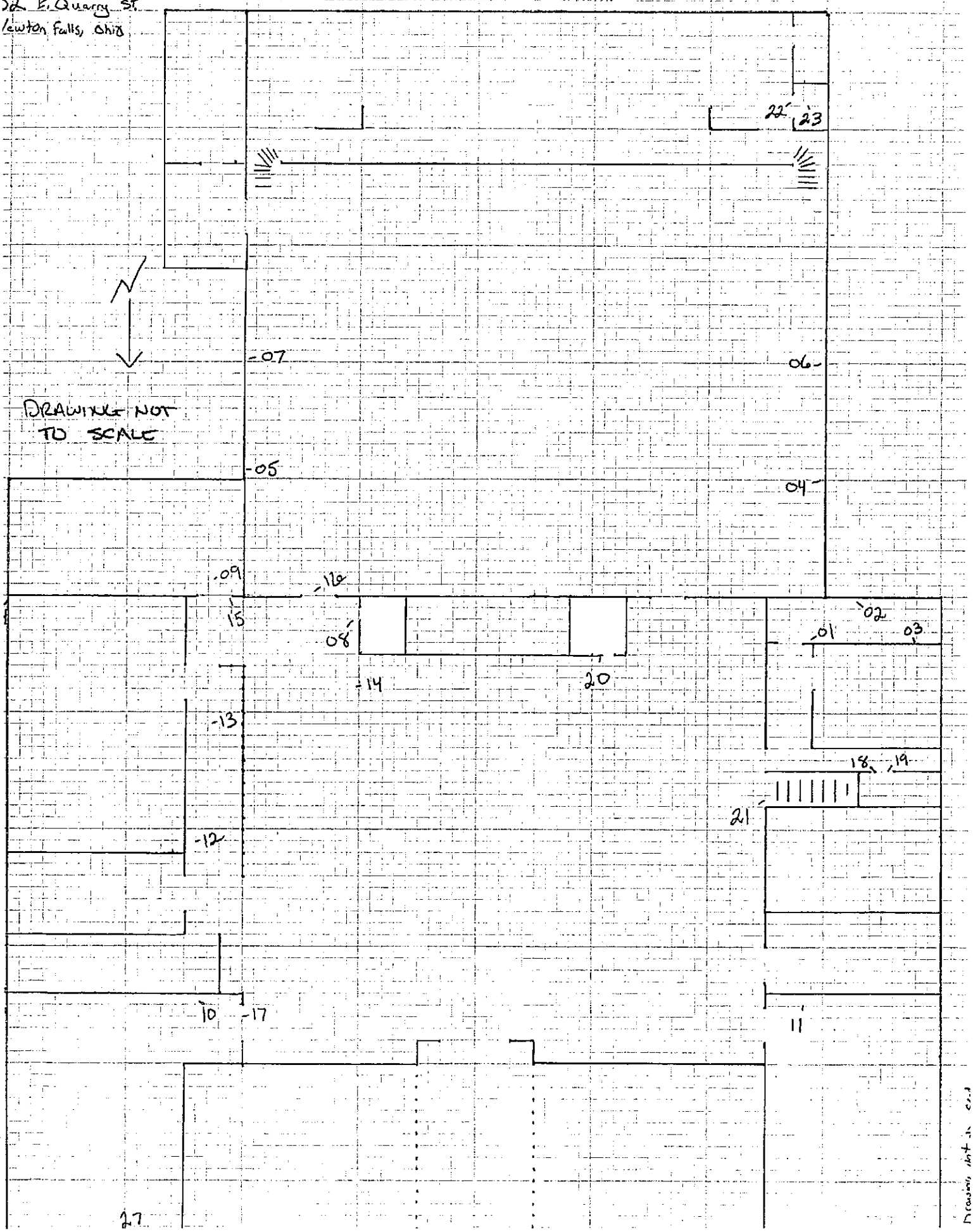

Environmental Industrial Hygiene Occupational Safety

Diamond Environmental

3624 State Route 303 • Ravenna, Ohio 44266
Phone: (330) 422-0799 • Fax: (330) 422-0798

RECEIVED
JAN 22 2016
DeSALVO
CONSTRUCTION COMPANY

January 18, 2016

Mr. Joe DeSalvo
DeSalvo Construction
1491 West Liberty Street
Hubbard, Ohio 44425

RE: Paint Chip sampling for Lead
- 52 E. Quarry St., Newton Falls, Ohio 44444
Diamond # 16-0002

Description of Work

Diamond Environmental, LLC. performed bulk sampling and analysis of various painted areas at the Newton Falls Community Center located at 52 east Quarry Street in Newton Falls, Ohio. Mr. Keith Bickel CAHES 31476 of Diamond Environmental performed the bulk sampling on January 4, 2016.

Bulk Sampling

The project consisted of procuring paint chips in the first floor area of the main building and gymnasium for lead content. See Lead Bulk Sampling Sheet for locations and results.

Sample Analysis Method

The samples were analyzed by flame absorption utilizing EPA METHOD 6010B –Paint Chips/Wipe Samples to determine concentrations of lead for interior surfaces.

Sampling Analysis Results

The samples were analyzed by flame absorption to determine concentrations of lead for interior surfaces. Under the hazard screen risk assessment criteria, paint which contains more than 5000 milligrams per kilogram (mg/kg) or 0.5% lead is considered lead-based paint. The majority of paint chip samples were above the 0.5% limit..

Paint Chip Results

Under the hazard screen risk assessment criteria, paint which contains more than 5000 mlligrams per kilogram (mg/kg) or 0.5% lead is considered lead based paint.

Three of the ten samples were above 0.5% and considered lead based paint. These paint chip samples came from the kitchen, mens restroom, and entrance to basement.

Recommendations

The following excludes painting and wall cleaning. Air monitoring for **lead MUST** be performed on contractors working with painted walls, windows, and baseboard **renovations and interior demolition per OSHA**. This must be done if there is a potential for lead exposure, no matter what the concentration, and until a negative exposure assessment is performed. Contractors must where suits and respirators. Contractors **MUST** have a physicals including pulmonary function test prior to donning respirators and have a 2 hour lead awareness training prior to starting work.

Environmental Industrial Hygiene Occupational Safety

Diamond Environmental

3624 State Route 303 • Ravenna, Ohio 44266
Phone: (330) 422-0799 • Fax: (330) 422-0798

For specific information regarding sampling locations and results, please refer to the enclosed sampling sheets. If you require any further information, please contact the undersigned.

Thank you for consulting Diamond Environmental, LLC.

Sincerely,

Diamond Environmental, LLC.

Keith R. Bickel, CHMM, REP, CAHES
Project Manager

Environmental Industrial Hygiene Occupational Safety

Diamond Environmental

3624 State Route 303 • Ravenna, Ohio 44266
Phone: (330) 422-0799 • Fax: (330) 422-0798

LEAD BULK SAMPLING & ANALYSIS

Client: DeSalvo
Project: Lead Paint Sampling
Diamond Work Order: 16-0002Pb

Sampling Date: 1-4-16
Hygienist: Keith Bickel
Building: 52 E. Quarry St.
Newton Falls, Ohio

Sample Number	Material	Functional Space	Analysis (%)
52-01Pb	Paint Chips - Blue	Kitchen	3.31%
52-02Pb	Paint Chips - Blue	Kitchen	3.34%
52-03Pb	Paint Chips - Crème	Reception Area	0.04%
52-04Pb	Paint Chips - Crème	Northeast Room - Room 1	0.09%
52-05Pb	Paint Chips - Brown	Men's Restroom - Door Trim	0.10%
52-06Pb	Paint Chips - Brown	Northwest Room - Room 2 Door Trim	AA
52-07Pb	Paint Chips - Pink	Entrance to Basement	AA
52-08Pb	Paint Chips - Pink	Entrance to Basement	4.93%
52-09Pb	Paint Chips - White	Entrance to Men's Restroom	0.75%
52-10Pb	Paint Chips - White	Entrance to Storage Room	0.24%

AA – Below Detectable Limit

NORTH COAST
ENVIRONMENTAL LABORATORIES, INC

North Coast ID: 01051617

Client: Diamond Environmental
3624 State Route 303
Ravenna, OH 44266

Contact: Keith Bickel

Project: 52 E. Quarry St; Newton Falls

P.O. #: 16-0002

Customer Sample ID	NC ID
52-01 Kitchen	01051617-1
52-02 Kitchen	01051617-2
52-03 Reception Area	01051617-3
52-04 Northeaast Room - Room 1	01051617-4
52-05 Mens RR - Door Trim	01051617-5
52-06 Northwest Room - Room 2 Door Trim	01051617-6
52-07 Entrance to Basement	01051617-7
52-08 Entrance to Basement	01051617-8
52-09 Entrance to Mens RR	01051617-9
52-10 Entrance to Storage Room	01051617-10

Tests Requested: Lead

Date Received: 01/05/2016

Date Reported: 01/11/2016

Reviewed By: MSimon

Approved By:

NORTH COAST
ENVIRONMENTAL LABORATORIES, INC

North Coast ID: 01051617
Client: Diamond Environmental

Customer ID	NC ID	Parameter	Method Number	Detection Limit	Date Analyzed	Results
52-01 Kitchen	01051617-1	Lead	6010B	0.01 %	01/08/2016	**3.31 %**
52-02 Kitchen	01051617-2	Lead	6010B	0.01 %	01/08/2016	**3.34 %**
52-03 Reception Area	01051617-3	Lead	6010B	0.01 %	01/08/2016	**0.04 %**
52-04 Northeaast Room - Room 1	01051617-4	Lead	6010B	0.01 %	01/08/2016	**0.09 %**
52-05 Mens RR - Door Trim	01051617-5	Lead	6010B	0.01 %	01/08/2016	**0.10 %**
52-06 Northwest Room - Room 2 Door Trim	01051617-6	Lead	6010B	0.01 %	01/08/2016	**AA**
52-07 Entrance to Basement	01051617-7	Lead	6010B	0.01 %	01/08/2016	**AA**
52-08 Entrance to Basement	01051617-8	Lead	6010B	0.01 %	01/08/2016	**4.93 %**
52-09 Entrance to Mens RR	01051617-9	Lead	6010B	0.01 %	01/08/2016	**0.75 %**
52-10 Entrance to Storage Room	01051617-10	Lead	6010B	0.01 %	01/08/2016	**0.24 %**

AA = Below Detectable Limit

firm overview

established	2012
principals	denise a. holt; aia, acha, ncarb, edac, leed ap rebecca a. tennant; aahid, iida, asid, edac
firm accreditations	better business bureau
firm certifications	women business enterprise
firm memberships	aia eastern ohio chapter builders assoc of eastern ohio and western pennsylvania regional chamber

services

the workshop arch+design, llc offers a variety of services including commercial architectural design, interior design, construction administration, usgbc/leed review and administration, existing facility review and documentation, life safety evaluation, statement of conditions development, third party code and regulations review, and facility standards program development.

qualifications

the workshop arch+design, llc maintains professional registrations in the State of Ohio and the Commonwealth of Pennsylvania.

The staff maintains professional registrations with the National Council of Architectural Registration Boards (NCARB) and the National Council for Interior Design Qualifications (NCIDQ) as well as professional memberships with the American Institute of Architects (AIA), the American Society of Interior Designers (ASID), and the International Interior Design Association (IIDA).

In addition, the staff maintains professional certifications from the American College of Healthcare Architects (ACHA), the American Academy of Healthcare Interior Designers (AAHID), the Center for Health Design (EDAC), and the U.S. Green Building Council (USGBC).

Certified WBENC Women's Business Enterprise

denise a. holt, aia, acha, ncarb, edac, leed ap

principal

Denise has worked on projects ranging from small interior renovations to new multi-million dollar facilities. In addition to working on the $145M inpatient facility and expansion for St. Elizabeth Boardman Hospital, Denise served as LEED Administrator for Partners in Urology Health which achieved LEED Silver and served as project architect for the $4M Joanie Abdu Comprehensive Breast Care Center at St. Elizabeth Youngstown Hospital.

Denise has been recognized nationally for her work in the healthcare sector from the time she was an intern. Most recently, she has received certification from the American College of Healthcare Architects (ACHA) as a healthcare architect.

Since establishing *the workshop arch+design, llc* Denise has served as principal in charge and project architect for Mercy College of Ohio's Youngstown campus expansion as well as numerous projects for Park Vista of Youngstown. She is currently principal in charge for an expansion at Washington Square Healthcare Center and is working on multiple projects with Cleanroom Design LLC.

In addition to her healthcare experience, Denise served as principal in charge and project architect for multiple projects (including the Tyler Grand Ballroom renovation) at Stambaugh Auditorium and new corporate offices for Jack Duffy & Associates in Hudson, Ohio. She has also served as a consulting architect for Youngstown State University on multiple projects.

Throughout her career, Denise has been responsible for all aspects of client projects. She is a detail oriented manager with excellent interpersonal skills necessary to maintain client relationships.

education	bachelor of science in architecture; kent state university, 2000 bachelor of architecture; kent state university, 2001
registrations	registered architect, state of ohio registered architect, commonwealth of pennsylvania
certifications	american college of healthcare architects, ACHA; national council of architectural registration boards, NCARB; the center for health design, EDAC; USGBC, LEED accredited professional
professional affiliations	aia eastern ohio chapter; executive board, president; builders assoc of eastern ohio and western pennsylvania; youngstown business and professional women
other affiliations	youngstown streetscape

Certified WBENC Women's Business Enterprise

relevant experience

feasibility studies	sproutz market northmar church multiple studies performed for Mercy Health*
existing facility evaluations, churches/social halls	Holy Family; Poland, Ohio Immaculate Heart of Mary; Youngstown, Ohio Newman Center; Youngstown, Ohio Our Lady of Mount Carmel; Youngstown, Ohio St. Christine; Youngstown, Ohio St. Michael; Canfield, Ohio
existing facility evaluations, schools	Holy Family; Poland, Ohio Immaculate Heart of Mary; Youngstown, Ohio Our Lady of Mount Carmel; Youngstown, Ohio St. Christine; Youngstown, Ohio
existing facility evaluations, others	Erie Terminal Building*; Youngstown, Ohio multiple physician offices*
third party code/ life safety reviews	Maplecrest Nursing Home Miami VA Hospital; Miami, Florida St. Elizabeth Youngstown Hospital*; Youngstown, Ohio St. Elizabeth Boardman Hospital; Youngstown, Ohio St. Joseph Warren Hospital*; Youngstown, Ohio Surgical Center at Southwoods*; Boardman, Ohio
masterplanning exercises	St. Elizabeth Youngstown Hospital*; Youngstown, Ohio St. Elizabeth Boardman Hospital; Youngstown, Ohio
civic	Stambaugh Auditorium Ballroom Renovation Stambaugh Auditorium Kitchen Renovation and Expansion Stambaugh Auditorium Roof Replacement
higher education	Edinboro University, Human Services Building* Mercy College of Ohio; Youngstown, Ohio Youngstown State University, Cushwa Hall Renovation Youngstown State University, DeBartolo Hall Renovation
corporate offices	Hill Barth & King LLC; Canfield, Ohio Jack Duffy & Associates; Hudson, Ohio Nadler, Nadler and Burdman; Canfield, Ohio Schroedel, Scullin & Bestic LLC; Canfield, Ohio
health and wellness	Healthy Balance Massage Center OM Yoga Studio

* indicates projects worked on under previous employment

Certified WBENC Women's Business Enterprise

Joshua D. Thomas, P.E.

Education: Bachelor of Science in Applied Science, William Rayen School of Engineering, Youngstown State University, 2001;
Master of Science in Engineering, Youngstown State University, 2011

Registration: Professional Engineer, State of Ohio, 2010
ICC Master Plans Examiner , 2015

Professional Associations: Member, Structural Engineers Association of Ohio

Experience:
Baker, Bednar, Snyder & Associates, Inc: 12 years
Fisher Engineering Associates, LLC: 6 years (Part Time)
J.A. McMahon, Inc: 2 years
Hodge Construction, Inc: 5 years

Joshua D. Thomas, P.E. provided engineering services for the following projects (partial list):

Riverwalk Stone Masonry Rehabilitation, Warren, Ohio, [plans and specifications]2010
Glenwood Avenue Resurfacing, Phase II, Youngstown, Ohio [plans and specifications]2008
Glenwood Avenue Resurfacing, Phase I, Youngstown, Ohio [plans and specifications]2007
East Fairfield coal company, North Lima, Ohio [Structural Design and Administration]2004
Sheppard of the Valley Corporate Office Building, Warren, Ohio [Structural Design and Administration 2005
Trumbull Memorial Hospital ED and Radiology Addition, Warren, Ohio [Structural Design and Administration]2005
Hubbard Police Station New Building, Hubbard, Ohio [Structural Design and Administration]2005
Trumbull Memorial Hospital Radiation Oncology Bridge Connector, Warren, Ohio [Structural Design and Administration]2005
Howland High School Press Box, Warren, Ohio [Structural Design and Administration] 2010
Middlefield Bank New Branch Bank, Cortland, Ohio [Structural Design and Administration] 2008
Taylor Kia Addition and Renovations, Boardman, Ohio [Structural Design and Administration] 2007
Meadowbrook Mall Addition and Renovations, Bridgeport, W.V. [Structural Design and Administration]2011
Akron Children's Hospital Warren, Warren, Ohio [Structural Design and Administration]2013

"Engineering Excellence"

GENERAL INFORMATION

DATE INCORPORATED:

- January, 1997

EDGE CERTIFICATION:

- September, 2007

WEBSITE:

- www.jmverostkoengineering.com

PROFESSIONAL LIABILITY

- Professional Liability Insurance is carried with Lloyds of London.

COMPUTER PROGRAM UTILIZATION

- Autodesk Revit MEP & AutoCAD MEP
- Trane Trace Load – Heat/Cooling Load software program
- Carrier HAP – Heat/Cooling Load and Life Cycle Costing
- Veritrane Duct Design – Duct sizing program
- eQUEST - Energy Modeling and Performance Software
- GLHEPRO- Ground Loop Heat Exchanger Modeling Program

SERVICES PROVIDED

- Mechanical design of HVAC, Plumbing and Fire Protection Systems.
- Design for Competitive Bidding applications
- Design for Design Build applications
- Building System Evaluations, Studies and Reports
- Life Cycle Costs and Equipment Comparisons
- Cost Estimates

PROFESSIONAL REGISTRATIONS

Ohio	#54044	Massachusetts	#42925	Virginia	#039090
Pennsylvania	#43601	New Jersey	#43363	North Carolina	#31960
West Virginia	#11914	Connecticut	#22993	New York	#084059
Florida	#53437	Arizona	#39636	Michigan	#2144366
Rhode Island	#7297	Nevada	#15976	Tennessee	#114868

PRINCIPLES

Joseph M. Verostko, P.E., LEED AP BD+C
Peter J. Verostko, P.E., LEED AP BD+C

"Engineering Excellence"

PETER J. VEROSTKO, PE, LEED AP BD+C

EDUCATION

Obtained a Bachelor of Mechanical Engineering from Youngstown State University in December of 2007.

PERSONNEL PROFILE

Mr. Verostko has worked for J.M. Verostko, Inc. since September 1997, as a high school Co-Op student. He currently is the Vice President and the head HVAC engineer and overall project manager. Mr. Verostko also handles the construction administration of many of the OSFC school projects, and all of our private hospital and other miscellaneous projects. His other responsibilities include building energy modeling and energy performance calculations, construction administrative duties including: construction coordination, project building code evaluations during design, and construction phases of projects completed in the office.

Mr. Verostko obtained his Professional Registration in 2010 for the State of Ohio, and has become a partner of the firm in January 2011.

PROFESSIONAL ORGANIZATIONS

American Society of Heating Refrigeration and Air Conditioning Engineers

Relevant Assessment Experience:

Schools:
Columbiana Schools Assessment; Columbiana, Ohio
Indian Lake High School Assessment*; Lewistown, Ohio
Indian Lake Middle School Assessment*; Lewistown, Ohio
Bryan Middle School Assessment*; Shaker Heights, Ohio
Heath Schools Assessment*; Heath, Ohio
Cleveland Metropolitan Schools Assessment*; Cleveland, Ohio
Ana School District*; Anna, Ohio
Fostoria Schools Assessment*; Fostoria, Ohio
Ottawa Hills School District Assessment*; Ottawa Hills, Ohio
Tinora School District Assessments*; Defiance, Ohio
Minster Local School District Assessments*; Minster, Ohio
Fairview High School Assessment*; Fairview Park, Ohio
Big Walnut Schools Assessments*; Sunbury, Ohio
Old Summit School Assessment; Girard, Ohio
Salam School District-House Bill Assessment and Verification; Salam, Ohio

Higher Education:
Youngstown State University-Jones Hall Feasibility Study; Youngstown, Ohio
Youngstown State University-Ward Beecher Libratory Exhaust systems study; Youngstown, Ohio

Prisons/Jails:
Ohio State Penitentiary*; Youngstown, Ohio
Trumbull County Corrections*; Lords town, Ohio
Lorain Correctional Institution*; Lorain, Ohio
Toledo Correctional Institution*; Toledo, Ohio
Juvenile Justice Center-Water Distribution Study; Youngstown, Ohio

Churches/Social Halls:
St. Patrick's Church-HVAC Upgrades; Youngstown, Ohio
Stambaugh Auditorium; Youngstown, Ohio
Our Lady of Victory; Andover, Ohio
St. Patrick Church; Kinsman, Ohio
Assumption Blessed Virgin Mary; Geneva, Ohio
Northmar Boiler Study; Warren, Ohio
Holy Trinity; Struthers, Ohio
Immaculate Conception; Youngstown, Ohio
Sacred Heart; Youngstown, Ohio
St. Ambrose; Garrettsville, Ohio
St. Anthony's; Youngstown, Ohio
St. Elizabeth; Campbell, Ohio
St. James; North Jackson, Ohio
St. John the Baptist; Campbell, Ohio
St. Peter & Paul; Youngstown, Ohio

1216 AMERITECH BOULEVARD
YOUNGSTOWN, OHIO 44509
PHONE: (330) 799-1339
FAX: (330) 799-2199
EMAIL: jmverostko@jmverostkoengineering.com

Healthcare:
Meadville Medical Center-Grove Street Facility Demolition Project; Meadville, PA
Meadville Medical Center-Orthopedic Center Evaluation; Meadville, PA
Meadville Medical Center-Outpatient Services Feasibility Study; Meadville, PA
Meadville Medical Center-Ongoing Master Planning; Meadville, PA
St Joseph's Health Care Center Surgery Expansion Project Feasibility; Warren, Ohio
Washington Square Assisted Living Addition Assessment; Warren, Ohio
Southwoods Surgery Center-Various Expansions; Boardman, Ohio

County Buildings:
Oak Hill Renaissance Place-Central Systems and HVAC Upgrades; Youngstown, Ohio
Youngstown City Courts; Youngstown, Ohio
Youngstown Annex Building Assessment; Youngstown, Ohio
Mahoning County Morgue-Ventilation Study; Youngstown, Ohio

*Assessments performed for the Ohio Facilities Construction Commission.

Eric D. Bella, P.E., Senior Associate

Mr. Bella has over 13 years of experience in electrical engineering including power distribution, power systems analysis, interior and exterior lighting design, life safety systems and communication systems. He has been involved in multiple healthcare, educational, religious, institutional, and commercial projects where design considerations were made based upon best practices, cost considerations, energy and system analysis and actual working conditions.

Representative Projects

Office/Commercial:

Taylor Winfield Corporate Office, Youngstown, OH
Farmer's National Bank Corporate Office, Canfield, OH
Meridian Services, Youngstown, OH
Meander Hospitality Group Offices, Youngstown, OH

Healthcare:

Akron Children's Hospital - Beeghly Campus
Mahoning Valley Hospital, Boardman, OH
Trumbull Memorial Hospital, Warren, OH
Diagnostic Cardiology Associates Office/Imaging Lab, Youngstown, OH
Premier Outpatient Therapy, New construction, Youngstown, OH
Eye Care Associates Surgery Center, Youngstown, OH

Education:

Youngstown State University, Youngstown, OH,

- Williamson College of Business (LEED Gold)
- Watson and Tressel Sports Training Site (LEED Silver)
- 5kV Medium Voltage Campus Loop Upgrades
- Lyden and Kilkawley House, Fire Protection System Upgrades

Mahoning County Career and Technology Center, Canfield, Ohio
Kirkmere Elementary School, Youngstown, OH
West Branch Combination K-8 School, Beloit, OH,
Edinboro University of Pennsylvania, Edinboro, PA

- Jeremy D. Brown Human Services Building, (LEED Gold)
- Compton Hall - Renovations

West Branch, Damascus Elementary School, OH, New construction
Struthers High School, Struthers, OH, Renovations/additions
University of Akron- Akron, OH

- Robertson Café - Renovations and Upgrades
- CBA Finance Lab - Renovations
- Psychology Museum - Relocation and Renovation

Additional:

Mike Pruitt Honda Car Dealership, Akron, OH
Greenwood Chevrolet, Hubbard, OH
Youngstown State University 5kV Arc Flash Hazard Analysis
Akron Children's Hospital Arc Flash Hazard Analysis

TITLE:

Senior Associate, Electrical
CJL Engineering Youngstown

EDUCATION:

2002 Youngstown State University
Bachelor of Science in Applied Science Degree in Electrical Engineering Technology

DeSalvo Construction Company, Inc. is a highly respected and trusted resource in the regional construction industry, offering a complete range of construction services from project conception to project completion.

The DeSalvo Construction Company, Inc. (DCC) team prides itself in maintaining a stellar reputation and centers its philosophy on practices that help deliver the product its customers expect.

A key strategy for DCC is self-performing a large amount of the work on projects. Where most builders will subcontract a majority of the work, DCC has the trained staff to do the work in-house. Routine self-performed work includes concrete foundations, masonry, stud framing, drywall, ceilings, and other carpentry work.

An equally-important strategy that maintains DCC's status in the region is the company's flexibility. Every project is individually approached. The only exception is that the client always comes first.

DeSalvo Construction Company Services			
Construction Management	**Construction Management At Risk**	**General Contracting**	**Design/Build Services**
LEED Services	**Facility and Program Needs Assessments**	**Construction Feasibility Studies**	**Pre-Construction Budgeting**
Project Scheduling	**Value Engineering**	**Constructability Reviews**	**Site Utilization Planning**

1. Resume for Joseph K. DeSalvo, President

RESUME OF KEY PERSONNEL FOR THIS PROJECT

NAME	ROLE IN THIS CONTRACT	YEARS EXPERIENCE	
Joseph K. DeSalvo, CHC	**Senior Management Lead**	a. TOTAL **19**	b. WITH CURRENT FIRM **19**
FIRM NAME AND LOCATION (City and **State**) DESALVO CONSTRUCTION COMMERCIAL / INDUSTRIAL **Hubbard, Ohio**	EDUCATION (Degree and Specialization) **Youngstown State University** (B.S., Business Administration)		

OTHER PROFESSIONAL QUALIFICATIONS (Publications, Organizations, Training, Awards, etc.)

American Society of Health Care Engineering – Certified Health Care Constructor

PAST PROJECTS

	(1) Title, Client & Location (City, State)	(2) Building Type, Size & Project Cost / Performance	(3) Type of Construction, Delivery Model & Services	(4) Date Completed: Design	(4) Date Completed: Construction
a.	**Niles K-2 and 3-5 Schools** Niles City LSD & OSFC Niles, Ohio	K-12 Academic (K-2nd) 70,000 SF K-12 Academic (3rd-5th) 70,000 SF $ 11,159,300	New Construction Multiple Prime General Trades Contractor		2013 On Schedule

(6) Role (Benefit / Value to Client) ☒ Check if project performed with current firm

Senior Management Lead responsible for executive oversight. Lead and manage the team to deliver exceptional results. Attend design and construction meetings to provide the communication necessary for all parties to work together as a productive team. Develop contingency plans in advance to mitigate potential risks.

	(1) Title, Client & Location (City, State)	(2) Building Type, Size & Project Cost / Performance	(3) Type of Construction, Delivery Model & Services	(4) Date Completed: Design	(4) Date Completed: Construction
b.	**Western Reserve K-12 School** Western Reserve LSD & OSFC Berlin Center, Ohio	K-12 Academic (K-12th) 118,000 SF $ 9,605,000	New Construction Multiple Prime General Trades Contractor		2011 On Schedule

(6) Role (Benefit / Value to Client) ☒ Check if project performed with current firm

Senior Management Lead responsible for executive oversight. Lead and manage the team to deliver exceptional results. Attend design and construction meetings to provide the communication necessary for all parties to work together as a productive team. Develop contingency plans in advance to mitigate potential risks.

	(1) Title, Client & Location (City, State)	(2) Building Type, Size & Project Cost / Performance	(3) Type of Construction, Delivery Model & Services	(4) Date Completed: Design	(4) Date Completed: Construction
c.	**Woodrow Wilson Middle School** Youngstown City LSD & OSFC Youngstown, Ohio	K-12 Academic (6th-8th) 67,500 SF $ 6,524,000	New Construction Multiple Prime General Trades Contractor		2010 On Schedule

(6) Role (Benefit / Value to Client) ☒ Check if project performed with current firm

Senior Management Lead responsible for executive oversight. Lead and manage the team to deliver exceptional results. Attend design and construction meetings to provide the communication necessary for all parties to work together as a productive team. Develop contingency plans in advance to mitigate potential risks.

	(1) Title, Client & Location (City, State)	(2) Building Type, Size & Project Cost / Performance	(3) Type of Construction, Delivery Model & Services	(4) Date Completed: Design	(4) Date Completed: Construction
d.	**Paul C. Bunn Elementary School** Youngstown City LSD & OSFC Youngstown, Ohio	K-12 Academic (PK-6th) 68,000 SF $ 5,259,000	New Construction Multiple Prime General Trades Contractor		2008 On Schedule

(6) Role (Benefit / Value to Client) ☒ Check if project performed with current firm

Senior Management Lead responsible for executive oversight. Lead and manage the team to deliver exceptional results. Attend design and construction meetings to provide the communication necessary for all parties to work together as a productive team. Develop contingency plans in advance to mitigate potential risks.

2. Management Systems:

DeSalvo Construction Company utilizes many different resources to manage our projects. For cost tracking & financial analysis we use Foundation Construction Accounting software applications. This system allows us to provide up to the minute cost information that can be used by the project team to make important decisions for fund allocation before, during and after construction activities.

DeSalvo Construction Company has also developed an internal management system that we apply to all of our projects. This system contains forms, logs and reports for tracking Requests for Information, Submittals, Bulletins, Architectural Supplemental Instructions, Field Work Orders, Estimates, Change Requests and Change Orders. Project Managers, Project Engineers, Estimators and Administrative staff have all been trained on our management policies and procedures. We conduct periodic training sessions to continue to improve our management systems and provide the best possible service to our clients.

Example of DeSalvo Construction In House Cost Report Form

02/16/2016 02:37:03 PM — DeSalvo Construction Company. — Page 1 of 2

Revised Job Cost
201144 - NILES ELEMENTARY SCHOOLS
to 2/16/2016

Cost Code No	Cost Code Description	Cost Class Description	Original Estimated Costs	Costs to Date	Remaining Committed	Revised Job Cost
GENERAL REQUIREMENTS						
1000	GENERAL REQUIREMENTS	LABOR		2,111.20		2,111.20
				2,111.20		2,111.20
1125	CM-SITE FACILITIES	MATERIALS		559.13		559.13
				559.13		559.13
1170	SURVEYING	LABOR		194.07		194.07
		SUBS/SUPPLIERS (PO'S)		22,667.50		22,667.50
				22,861.57		22,861.57
1316	INSURANCE - BOND	MATERIALS		100.00		100.00
		SUBS/SUPPLIERS (PO'S)		79,282.00		79,282.00
				79,382.00		79,382.00
1319	MAIN OFFICE EXPENSE	MATERIALS		31.39		31.39
		SUBS/SUPPLIERS (PO'S)		379.12		379.12
				410.51		410.51
1322	PHOTO-AERIAL	SUBS/SUPPLIERS (PO'S)		6,200.00		6,200.00
				6,200.00		6,200.00
1330	PUNCH LIST	LABOR		9,217.32		9,217.32
		MATERIALS		799.78		799.78
		FUEL		20.00		20.00
				10,037.10		10,037.10
1370	SUPERVISION	LABOR		125,420.49		125,420.49
				125,420.49		125,420.49
1372	ADM. WORK IN FIELD	MATERIALS		57.18		57.18
				57.18		57.18
1500	TEMP FACILITIES (MOBILIZATION)	LABOR		2,245.56		2,245.56
		MATERIALS		2,721.25		2,721.25
		FUEL		130.01		130.01
				5,096.82		5,096.82
1510	TEMP. UTILITIES	MATERIALS		942.49		942.49
		SUBS/SUPPLIERS (PO'S)		39,954.02		39,954.02
				40,896.51		40,896.51
1511	TEMPORARY OFFICE	LABOR		2,809.10		2,809.10
		MATERIALS		1,076.05		1,076.05
		SUBS/SUPPLIERS (PO'S)		13,333.48		13,333.48

3. Self Performed Work:

A full service construction company, DeSalvo Construction Company has the capability of performing many portions of this project in-house. We have the resources to perform a variety of construction activities such as demolition, concrete, masonry, carpentry, metal framing, drywall, and acoustical ceiling systems. We own our own scaffolding, material handlers, gas powered and electrical man lifts. The tradesmen employed by DeSalvo Construction Company have years of experience erecting quality buildings. This expertise will prove beneficial in supervising the quality of workmanship performed by subcontractors, enforcing the schedule, and ensuring that the requirements of the design specifications are being strictly followed. Any work to be self-performed will be competitively priced per the project requirements.

Western Reserve Local Schools New K-12 School
Construction of the new K-12 school with occupied high school seen in background

Sweeney Chevrolet Addition & Renovation
Interior framing installed by DeSalvo Construction

Covelli Enterprises Headquarters Building
Exterior work in winter conditions

James A Garfield Elementary School
Exterior masonry veneer installed by DeSalvo Construction bricklayers

4. Estimating:

One of the most important attributes of our team is our ability to listen and communicate. We are accustomed to working on projects which have the influence of many different groups on the project's scope and vision. Working through and coordinating all interests and desires of each group is an integral part of the project process for us. It is our responsibility to balance all the elements of a project within the scope and budget. Below is a short list of projects that includes an analysis of budgetary costs versus contractual costs that demonstrates owner project savings as a result of DCC estimating due diligence.

Track Record of Performance of DeSalvo Construction Company In House Estimating

Project	Project Budget (Advertised Bid or A/E)	Project Contract or GMP Amount	Project Savings
Western Reserve K-12 School	$ 9,650,000	$ 9,226,000	$ 424,000 (4.4%)
Kent State – McDowell Hall	$ 1,204,000	$ 964,000	$ 240,000 (19.9%)
Stambaugh Auditorium	$ 461,359	$ 350,089	$ 111,270 (24.1%)
Marian Commons	$ 6,000,000	$ 5,655,561	$ 344,439 (5.7%)
Campbell Stadium	$ 2,500,000	$ 2,384,374	$ 115,626 (4.6%)

Example of DeSalvo Construction In House Estimate Form

PROJECT: Western Reserve K-12 School				DATE: 04/01/10		BID NUMBER: 10-024			BASE BID X	ALT	PAGE 34 of
	COST CODE	DESCRIPTION				LAB	MAT	SUB	LABOR-1	MATERIAL-2	TOTAL
34	0 4 0 0 0	MASONRY	SIZE	UNIT	QUAN	1	2	3			
##	04816.18	MASONRY UNITS - BOND BEAM HOLLOW	8x8x16	EA	9,458	2	1		18,916	9,458	28,374
##	04816.19	" - " "	6x8x16	EA	152	2	0.95		304	144	448
##	04070	" - GROUT		CY	754	40.00	###		30,160	33,930	64,090
##	04082	" - REBAR		#	145,000	0.03			4,350	0	4,350
##	04083.1	" - DUROWALL LADDER	16"	LF					0	0	0
.31	04083.2	" "	14"	LF					0	0	0
##	04083.3	" "	12"	LF	11,130	0.1	0.1		890	1,113	2,003
##	04083.4	" "	10"	LF					0	0	0
##	04083.5	" "	8"	LF	57,277	0	0.09		2,291	5,155	7,446
##	04083.6	" "	6"	LF	4,577	0	0.08		183	366	549
##	04801	VENEERS - F.B. MODULAR		EA					0	0	0
##	04802	" - F.B. UTILITY	4x4x12	EA	128,604	1.34	0.64		172,329	82,307	254,636
##	04803	" - F.B. ECONO		EA					0	0	0
##	04804	" - F.B. MONARCH		EA					0	0	0
##	04805	" - F.B. DBLE MONARCH		EA					0	0	0
.41	04820	" - GROUND FACE		EA					0	0	0
##	04820	" - GROUND FACE		EA					0	0	0
##	04821.1	" - SPLIT FACE		EA					0	0	0
##	04821.2	" - " "		EA					0	0	0
##	04821.3	" - " "	4x8x16	EA	4,100	1.97	1.99		8,077	8,159	16,236
##	04821.4	" - " " (12 HIGH)		EA					0	0	0
##	04821.5	" - " "		EA					0	0	0
##	04083.7	" DUROWALL (H & E)	4-2-18	LF					0	0	0
##	04083.8	" "	4-2-16	LF					0	0	0
##	04083.9	" "	4-2-14	LF					0	0	0
						CONTINUE:			237,501	140,632	378,133
						TOTALS:					

5. Scheduling:

A positive track record of on time project performance is critical to any construction firm's reputation. DeSalvo Construction Company has a proven track record of completing projects on time, and ahead of the anticipated original turnover milestone date. Almost all projects have unforeseen conditions occur that can impact a schedule – such as unsuitable soils, extremely cold winters, or unanticipated material procurement delays. A successful contractor is able to adapt, adjust, plan, and execute seamlessly to accommodate changes while maintaining the project schedule and budget. Below is a short list of projects that demonstrate our proven track record of accommodating such conditions while successfully delivering on time project completion.

Track Record of Performance of DeSalvo Construction Company Project Completion

Project	Scheduled Completion Date	Actual Completion Date
Tech Belt Energy & Innovation Center (TBEIC)	December 31, 2014	December 31, 2014
WVNCC Applied Technology Building	April 12, 2013	April 12, 2013
Western Reserve K-12 School	November 29, 2011	November 29, 2011
Kent State – McDowell Hall	August 27, 2009	August 16, 2009

Example of DeSalvo Construction CPM Schedule

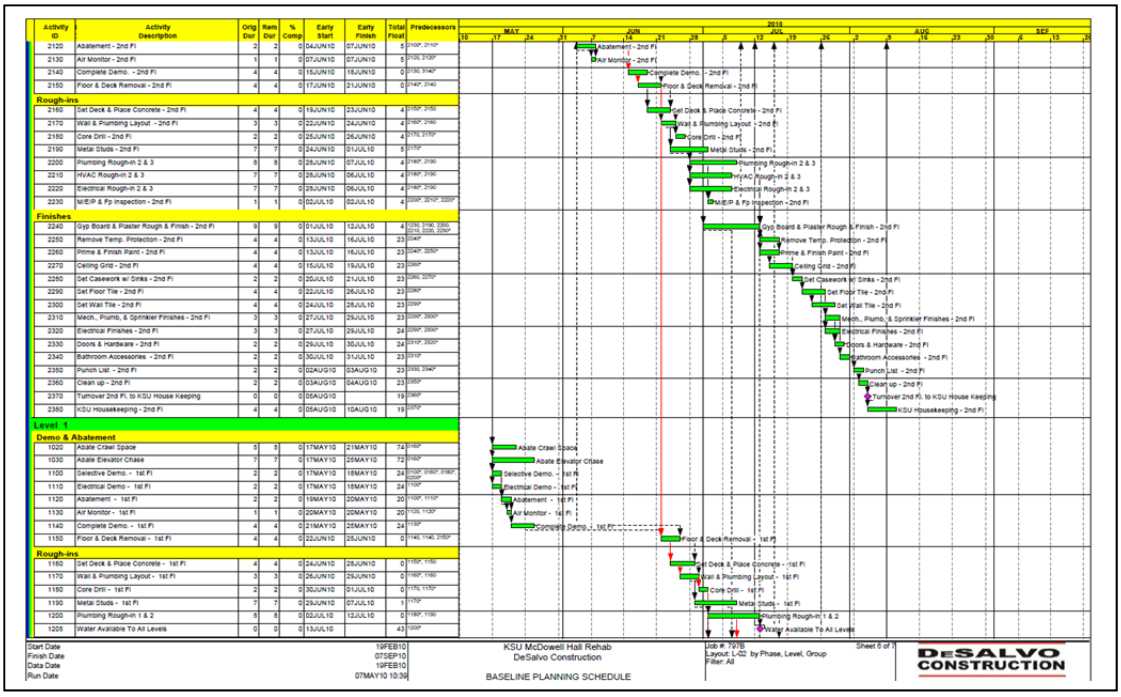

6. Letters of Reference:

In addition to the company background information provide above, please find the following pages which contain various letters of reference from past clients.

Western Reserve Local School District

BOARD OF EDUCATION
MAHONING COUNTY

Jeffrey Zatchok
Superintendent
Cathy Romack
Treasurer

13850 AKRON-CANFIELD ROAD

BERLIN CENTER, OHIO 44401-9756

PHONE: (330)547-4100 FAX: (330)547-9302

Debbie Farelli
Principal K-5
Douglas McGlynn
Principal 6-12

To Whom It May Concern:

Re: DeSalvo Construction Company
Recommendation for Construction/Design Services

It is with distinct pleasure that I provide my recommendation for the services provided by the DeSalvo Construction Company. Before the start of my tenure as superintendent for the Western Reserve Local School District, I was the principal at Western Reserve High School. During the time of construction for our new K-12 facility, I had the opportunity to work closely with the DeSalvo Construction and their top level company officials, as well as Mark Dodd the project construction manager.

From ground breaking to ribbon cutting, this team work diligently with all parties involved, including faculty and staff of Western Reserve Schools, representatives of the Ohio School Facilities Commission and numerous subcontractors on site. Once awarded the construction contract, DeSalvo's experience proved invaluable as they constructed our new K-12 building less than 50 feet away from our existing high school. Mark Dodd's assistance throughout the process as construction manager, kept the project moving at a pace to ensure that milestone dates were met and the project was delivered within the established budget.

This team's success cannot only be measured in achieving the goals established for the new facility but in their determination to minimize disruption with the daily operations of our high school campus and secure the construction area to protect students and visitors. They continuously communicated with the District any proposed logistic and safety strategies and addressed any concerns. We could not have asked for a more qualified and responsible team.

Please feel free to contact me to further discuss our District's experience working with DeSalvo Construction, including Mark Dodd. I highly recommend this team for any construction project that may be in your future.

Very Truly Yours,

Jeffrey Zatchok
Superintendent

Letters of Reference (continued):

Frank W. Danso
Superintendent

Linda C. Molinaro
Treasurer

Niles City Schools

Birthplace of William McKinley
25th President of the United States

309 North Rhodes Ave.
Niles, Ohio 44446

(330) 989-5095
(330) 989-5096-Fax

www.nilescityschools.org

August 13, 2014

To Whom It May Concern,

This letter is to share my thoughts on the DeSalvo Construction Company who built both our Primary and Intermediate School Buildings. Upon entering the Niles Educational Community I became involved with the Ohio School Facilities Project which was already in process. The DeSalvo Construction Company was, as mentioned, in charge of two of our three new buildings. In working with the DeSalvo Company, I found that all interaction and communication was always very professional in scope and sequence. The leadership of this company, whether in office or on site, was always very open to discuss any issues both during and after the build.

Thus, a combination of very professional people combined with quality workmanship, provided our School System with great buildings.

Yours in Education,

Frank Danso

Frank Danso,
Superintendent

Letters of Reference (continued):

James A. Garfield Local Schools
Orson E. Ott Administrative Offices
10235 St. Rt. 88
Garrettsville, Ohio 44231

Voice: 330.527.4336
Fax: 330.527.5941

Ted A. Lysiak, Superintendent

Tracy L. Knauer, Treasurer

To whom it may concern:

Re: DeSalvo Construction Company
Recommendation for Construction/Design Services

With well earned respect, I confidently recommend the DeSalvo Construction Company and Vice President/Senior Project Manager Mark Dodd for any school construction projects and other complex building projects.

I had the good fortune of working with DeSalvo on the $5 million, James A. Garfield Elementary Addition completed in August 2014. It stands out as one of the most complex projects undertaken in our community. The project was under an extremely aggressive timeline due to requirements of the state grant funding the project. Our 17,000 square foot addition was built in only 100 work days. In order to meet our goal DeSalvo's ability to coordinate appropriate manpower was imperative. Mr. Dodd and our site superintendent Charlie Fury supported each other seamlessly, worked diligently, and communicated well together and with the team to successfully complete the project on schedule.

It is important to note that although the schedule for the aforementioned project was aggressive, I was never concerned with quality being compromised. DeSalvo's team worked rigorously with pristine attention to detail from groundbreaking to ribbon cutting. It is this work ethic that allowed DeSalvo to construct our community a building we will be proud of for the next 50 years.

The DeSalvo team managed their portion of the submittal and closeout process exceptionally well and were always prepared to proactively identify options and solutions to challenges inevitably occurring in a complex project. Manpower and material procurement were managed well and as adjustments were required DeSalvo smoothly made those adjustments to enhance the flow of construction progress.

The success of any complex project depends in large measure on the team assembled and the team's ability to communicate and work collaboratively and unselfishly towards the goal. Desalvo's service to the James A. Garfield School District was excellent and their contribution to the construction team commendable. Again, I highly recommend the DeSalvo team and would welcome their contribution to future construction teams I work with. Your inquiries are invited.

Sincerely,

Ted A. Lysiak

Ted A. Lysiak
Superintendent

Letters of Reference (continued):

OHIO HISTORY CONNECTION

December 29, 2015

To Whom It May Concern

Re: DeSalvo Construction Company, Inc.
Letter of Recommendation

After a public bidding process, DeSalvo Construction was awarded the contract for the renovation of the Museum of Ceramics (East Liverpool, Ohio) in January, 2015. During construction, unforeseen conditions arose in the existing building, which added complexity to the project.

Throughout the entire project, DeSalvo Construction Company's management, site supervisor, and site staff were extremely competent and professional, both individually and as a team. Through each twist and turn of the project, DeSalvo worked together with the architect/engineer to efficiently find solutions. Necessary changes to the contract scope were handled fairly and with reasonable, well-communicated, and well-coordinated schedule adjustments.

DeSalvo effectively managed sub-contractors and worked well with our site staff, who continued to work in the building during construction – and report how much they enjoyed DeSalvo's site staff. Communication was clear and responsive with the architect and engineer.

We would not hesitate to work with DeSalvo again, and we would highly recommend them to other owners who are considering work with them. Their high level of integrity and professionalism is unique.

Please do not hesitate to contact me, if you have further questions about our work with DeSalvo Construction or this project.

Sincerely,

Amy Kaspar

Amy Kaspar, Architect
v: 614.297.2445
akaspar@ohiohistory.com

c: Fred Smith, Department Manager

800 E. 17th Ave., Columbus, OH 43211-2474 • 614.297.2300 • ohiohistory.org

Letters of Reference (continued):

WEST VIRGINIA NORTHERN COMMUNITY COLLEGE

To Whom It May Concern:

Re: DeSalvo Construction Company
Recommendation for Construction/Design Services

Please accept this letter of recommendation endorsing DeSalvo Construction Company for construction and design services. In my capacity as VP Administrative Services/CFO, I had the opportunity to work closely with DeSalvo's top company officials and their project/construction managers. Throughout each meeting or discussion, I came away impressed by DeSalvo's willingness to answer questions, resolve problems, and interact professionally on all issues.

Once awarded the contract, DeSalvo's experience proved invaluable as they constructed WVNCC's Applied Technology Center. DeSalvo's construction management team adeptly coordinated the work of the subcontractors, keeping the project budget and timeline intact.

Of equal significance to me is DeSalvo's ability to minimize disruption on WVNCC's daily operation as well as provide more than adequate security of the construction site. DeSalvo acted responsibly and with integrity in its interaction with WVNCC and architect.

Please feel free to contact me at 304.233.5900 to further discuss WVNCC's experience in working with DeSalvo Construction. I highly recommend DeSalvo for any future construction endeavor.

Sincerely,

Stephen M. Lippiello

Stephen M. Lippiello
CFO/VP Administrative Services

Wheeling
304-233-5900

New Martinsville
304-455-4684

Weirton
304-723-2210

www.wvncc.edu

Letters of Reference (continued):

TBEIC Tech Belt Energy Innovation Center

August 11, 2014

Re: DeSalvo Construction Company
Reference for Construction/Design Services

To Whom it May Concern,

I am pleased to offer this reference for the DeSalvo Construction Company. The Tech Belt Energy Innovation Center (TBEIC) is being developed as a combined energy technology incubator and an energy technology test and demonstration laboratory. Our project is complicated not only in design and function, but in construction project flow and financing also. Funded in parts by the US Department of Energy, State of Ohio, local philanthropy and historic tax credits, the project is rehabilitating an old department store into a new techology business facility in downtown Warren.

In the TBEIC project DeSalvo team has accepted the responsibility of design, tax credit finance coordination, project management and construction. Our experience with DeSalvo has been extremely positive. The team has been responsive, patient and nothing but professional and we don't think we could have chosen a better partner in the project.

I would not hesitate to work with this DeSalvo team again and have already suggested them to others. If you have any questions about our experience or project, please do not hesitate to contact me.

Sincerely,

Dave Nestic
Chief Executive, Regional Operations

Tech Belt Energy Innovation Center
Raymond John Wean Foundation Building
147 West Market Street, Warren, Ohio 44481
www.tbeic.org

Letters of Reference (continued):

STAMBAUGH

AUDITORIUM

October 9, 2014

Re: DeSalvo Construction Company

To Whom It May Concern:

Starting in May of 2013, the DeSalvo Construction Company began renovation work on the Grand Ballroom at Stambaugh Auditorium in Youngstown, Ohio. This is an ongoing project which is tentatively scheduled to be completed in early 2015. Nothing about the Grand Ballroom renovations here at Stambaugh Auditorium was easy. The project has been weaved in between events causing DeSalvo Construction to move onsite, work for a week or two, then clear the space to allow for events to take place and then move back in for more construction. DeSalvo has been more than accommodating and patient during these very tight work windows.

Another challenge to working in Stambaugh Auditorium is that the facility was built in 1926 and is on the National Register of Historic Places. DeSalvo has been respectful of the historic nature of the facility as well as prepared for the challenges that come with renovating a space that was built more than 87 years ago. Every phase of the project has been completed on time and turned over ready to be used for our next event.

From the start of this project, we have had every bit of confidence in DeSalvo Construction and their team's ability and professionalism. We highly recommend DeSalvo Construction and plan to use them again for future projects.

Sincerely,

Matt Pagac
General Manager
Henry H. Stambaugh Auditorium